INTELLECTUAL PROPERTY

PRINCIPLES AND PRACTICE

Judy Winegar Goans

The first edition of this work was prepared in the course of USAID-Cairo Contract Nos. 263-C-00-96-0050-00, Strengthening Intellectual Property Rights in Egypt, and OUT-PCE-I-822-98-00016-00, Technical Assistance for Intellectual Property Rights in Egypt, and revised in the course of MOBIS Contract No. GS-10F-0619N, Task Order No. 263-M-04-00020-00.

A second edition was prepared in the course of USAID Contract No. GEG-I-00-04-00002-00, SEGIR MACRO II, Task Order H203-300, Andean Trade Capacity Building Program.

CONTENTS

ILLUSTRATIONS

Figures

Tables

PREFACE

This book is intended to provide an overview of the field of intellectual property, to serve as a reference for practitioners or as a textbook in a survey course. It is intended neither as a treatise nor as a guide to practice in any particular jurisdiction.

The decision to undertake this work grew out of a perceived need for a text that did not presume prior knowledge of the subject and yet offered sufficient depth to be useful to an intellectual property practitioner. For the first edition (2002–2003), another impetus was the need for a comprehensive treatment of the subject in the Arabic language, since the author was at that time working in Egypt.

Materials in this text were primarily developed from lectures and reference materials provided under projects managed by Nathan Associates Inc. on behalf of the United States Agency for International Development. Some of these materials were developed for use in training personnel of industrial property offices; others for conferences and workshops for attorneys, industrial property agents, and businesspersons; and others for lectures in the Faculties of Law of Menoufia University, Ain Shams University, and Cairo University. Although the first edition of the book was developed for use in Egypt, the emphasis of the text is on international norms of protection, an essential element of international property law in view of the increasingly global nature of trade and therefore of intellectual property practice.

This 2014 edition has been updated to address international developments in intellectual property and to address issues that have gained prominence over the years. Despite these additions, the text does not attempt to address every possible issue in intellectual property. That is the province of a treatise—and an appropriate subject for academic inquiry.

The author would like to extend her appreciation to a number of people without whom this text might never have come into being. Foremost are those who contributed to the first edition: Ms. Patricia Drost, whose work was incorporated in the chapter on patents, Mr. G. Lee Skillington, who kindly reviewed and offered recommendations on the chapter on international agreements, and Mr. David Weinstein, whose materials were incorporated in the chapter on trademarks. Although this second Egyptian edition makes substantial revisions to those

chapters, the contributions of these experts remain invaluable. Thanks are due also to Mrs. Jaleen Moroney for reading and commenting on the text of the first edition, to Mr. Amr Hegazy, who kindly oversaw the electronic management of various drafts of the first edition. Without the first edition, the second and third editions would never have been possible.

Thanks are also due to Andrea Heggen and Robert Greene, whose editorial efforts and insight substantially improved this second Egyptian edition, to Mrs. Ola Tanani for supervising printing, and to Mrs. Amira Diaa for her efforts in the format and layout of this edition.

It would be impossible to mention all the people who have contributed in some way to the production of this text—attorneys, industrial property agents, and government officials charged with implementing the intellectual property laws, engineers and economists, businesspersons, law professors, and law students—and whose questions and comments helped to shape my thinking. It has been a privilege to work with many people on different continents to frame the issues discussed in this work.

I would like to thank the United States Agency for International Development (USAID) Trade Facilitation Project for allowing me to prepare this present version, and USAID–Cairo supporting the preparation of both the first edition and this present edition. In particular, I would like to acknowledge the support of our program managers in connection with the two Egyptian editions. Ms. Manal El Samadony graciously supported the development of both the first edition of this book and this revised and expanded edition. Without her continuing vision and support, this book would never have come into being. I also thank Technical Assistance on Intellectual Property Rights in Egypt chief of party Jaleen Moroney, under whom we began the first edition, and John Varley and Lindsey Wellons, both of whom served as Trade Facilitation Project Chief of Party during the preparation of this edition.

Finally, I would like to express my appreciation to my husband Ron Goans, my family, and my colleagues for their patience while this book was being prepared and revised.

Judy Winegar Goans

August 2014

ACKNOWLEDGMENTS

Most material in this book consists of the original work or brief quotations that are suitably referenced. However, in a few cases, the text incorporates works by others, whose rights should be acknowledged:

Table 2 is reproduced with permission of the World Bank and the International Finance Corporation.

The chapters on Patents and Industrial Designs use illustrative quotations and drawings from several U.S. patents.

The images on page 82 are the property of Microsoft Corporation, ©2002 Microsoft Corporation, all rights reserved, and are used in accordance with the Microsoft End User License Agreement.

Chapters on patents, industrial designs, and copyright and related rights make extensive use of materials published by the U.S. Patent and Trademark Office and the U.S. Copyright Office. In particular, the discussion of protected subject matter, page 109, incorporates significant material from chapter 15 of the *Manual of Patent Examining Procedure*. In addition, the book frequently quotes or paraphrases language from international agreements, including the Berne Convention for the Protection of Literary and Artistic Works; the Paris Convention for the Protection of Industrial Property; the International Convention for the Protection of New Plant Varieties; and the Agreement on Trade-Related Aspects of Intellectual Property Rights.

Where examples are used, no endorsement or recommendation is implied. All marks are used for illustrative purposes only and are the property of their owners. Particular acknowledgment is made of the following: *Bakelite*®, appearing on page 44; *Seahorse*®, on pages 197 and 211; *Exxon*®, on pages 197 and 211*; Better Homes and Gardens*®, on page 233; *bimbim*®, on page 234; *Ceylon Tea Symbol of Quality*®, on page 250*; Juan Valdez*® and *Colombian* on pages 250-251*; Subway*®*, BMT*® on page 247, *Coca-Cola*®*, Coke*®*, and Coca-Cola—It's the Real Thing*®*,* on pages 29 and 252; Pepsico, on page 35; also the mark *Sprite*® appearing on page 252, and the marks *Cadillac*®, *Buick*®, *Chevrolet*®, *Camaro*® or *Escalade*®, *General Motors*®, and *GM*® appearing on page 252.

ABOUT THE AUTHOR

Judy Winegar Goans is a registered patent attorney with more than thirty-five years' experience in intellectual property and international law. Her work falls into three main areas: technical legal assistance to help developing countries meet their international obligations on intellectual property; training and other institutional development activities; and developing strategies that use intellectual property to promote competitiveness.

Before coming to Nathan Associates, Ms. Goans worked in the U.S. Patent and Trademark Office where, among other duties, she organized the Visiting Scholars Program (now Global Intellectual Property Academy). During Ms. Goans's career, her work has included drafting and analyzing intellectual property laws for compliance with international obligations; preparing and prosecuting applications to patent inventions and register trademarks; intellectual property licensing; advising on the role of intellectual property in contributing to economic development; and institutional capacity-building.

Ms. Goans formerly headed Nathan Associates' Strengthening Intellectual Property Protection in Egypt Project and the Serbian Intellectual Property Office Operational and Organizational Technical Assistance Project. She has consulted on intellectual property in many countries throughout the world. Most recently, she served as an adviser to the intellectual property department of the Lao People's Democratic Republic, an effort that cleared the way for that country to become a member of the World Trade Organization.

Ms. Goans is also the author of a manual for technology transfer professionals. She has written a number of articles on various aspects of intellectual property and serves as Editor-in-Chief of *IP*, the newsletter of the Intellectual Property Section of the Tennessee Bar Association. She holds a Bachelor of Science in Engineering Physics and a Doctor of Jurisprudence degree and is admitted to practice before the United States Supreme Court.

1 INTRODUCTION TO INTELLECTUAL PROPERTY

Intellectual property is a field of law that deals with property rights in intangible things. It offers a means for promoting progress by protecting rights in new creations of the mind, and it rewards honest dealing and promotes consumer satisfaction by regulating certain aspects of business behavior. Intellectual property is chiefly used as a business tool, but it also recognizes certain non-economic values in creative works.

INTELLECTUAL PROPERTY

- Industrial Property
  - Inventions, marks, and the repression of unfair competition
- Copyright and Related Rights
  - Works of authorship
  - Rights relating to performances, sound recordings, and broadcasts

Intellectual property is generally divided into two main branches: *industrial property* and *copyright*. *Industrial property* includes inventions, industrial designs, marks, geographical indications, and a branch of law referred to as the repression of unfair competition. An *invention* is any new development in any field of endeavor. An *industrial design* relates to the appearance of a useful item. A *mark* is any sign or combination of signs capable of distinguishing the goods or services of one undertaking from those of another. *Unfair competition* includes any act contrary to honest commercial practices.

An inventor may keep an invention secret or request the statutory protection of a patent. Other types of innovations may be protected as industrial designs, plant varieties, utility models, or in accordance with a *sui generis*[1] system of protection. Also included in industrial property are certain forms of intellectual property related to the promotion or labeling of goods and services. These include types of

[1] *Sui generis* means "of its own kind" (that is, not according to another system of protection).

marks, such as certification marks and collective marks, as well as geographical indications, trade names, and trade dress.

Laws prohibiting unfair competition address a broad range of topics. Unfair competition law provides the legal basis for protecting trade secrets, preventing dilution or disparagement of marks, and providing redress for consumers who are harmed by mislabeling and false advertising.

Copyright relates to works of authorship. A *work of authorship* is the expression of ideas in an original way, in a tangible form.[2] Works of authorship span a great range of forms, from poetry to computer programs, from technical drawings to paintings and sculptures, and from music to architectural drawings. Related to copyright is the branch of law referred to as *neighboring rights* or *related rights*, which protect the rights of performers, producers, and broadcasters.

The following table provides a quick summary of the types of intellectual property and the subject matter each form of intellectual property protects.

Table 1. Forms of Intellectual Property by Type of Subject Matter Protected

Form of Intellectual Property	Subject Matter Protected
Undisclosed information	Secret information
Patents	Inventions
Industrial designs	Appearance of useful objects
Plant variety protection (breeders rights)	New plant breeds
Trademarks	Indications of the source of goods or services
Geographical indications	Indications of geographic origin where quality, reputation or other characteristic is attributable to the geographical region
Copyright	Literary and artistic works
Neighboring rights	Performances, broadcasts, photograms
Integrated circuit topographies	Layout design used to create integrated circuit "chips"

[2] Most countries restrict copyright protection to works that are in a tangible form—in writing or recorded, painted, or drawn, or otherwise placed in a form that is not ephemeral or temporary. However, a few countries provide for the possibility of copyright for certain oral works, even if they are not in writing or recorded.

HISTORICAL BACKGROUND

The field of intellectual property is sometimes described as a new branch of law, but its roots are actually quite old. In ancient times, rulers sometimes offered rewards to persons who developed new things. Near the end of the third century B.C., the Greek historian Phylarchus wrote that the rulers of the Greek city Sybaris issued patents for new foods.[3] However, the more common approach to encouraging innovation and progress was by offering prizes. The ancient Greeks held contests to recognize and reward outstanding achievements in many fields. The Olympic Games represented one such contest, but the Greeks also held contests on performances (flute playing, singing, acting, public speaking, reciting Homer, and dancing), the writing of tragedies and comedies, painting, poetry, sculpting and pottery, production of superior agricultural products, and even skills in medicine and surgery.[4]

While the prospect of a prize or award provides an incentive to invest in making something new, there is little certainty that any particular inventor would come to the attention of the ruler or find sufficient favor to obtain the reward. This is especially true for inventions that benefit ordinary people, such as household implements or improvements in the tools used in trade, even though these confer a great social benefit.

In more recent times, patent law developed from the practice of awarding monopolies. Monopolies have long been held in disfavor but were perpetuated informally to gain access to advances in knowledge. In the Middle Ages, monopoly rights were sometimes granted to guilds to attract the guild to a particular city or region and thus allow the region to acquire the technology in which the guild was knowledgeable.

By the fifteenth century, a patent system was beginning to take shape in Europe. Although several countries granted patents, novelty was not necessarily a feature of those patents, and patents of introduction—grants of exclusive rights to a person

---

[3] 1 *Lipscomb's Walker on Patents* 7 (1984) (hereinafter Lipscomb).

[4] Skoyles, John R., *Leviathan, ch. 2,* (1997), http://www.skoyles.greatxscape.net/lv2.html (page no longer available).

who introduced technology that was new to the country—remained a feature of the patent laws of some countries well into the last quarter of the twentieth century.[5]

An important distinction developed between a patent for a new invention and a monopoly on a product that is already known. Queen Elizabeth I of England awarded monopolies as a means for raising money for her government.[6] These monopolies were granted for such staple items as salt, iron, playing cards, vinegar, steel, brushes, oil, and paper, among other commodities, as well as for the transportation of certain other items.[7] These monopolies were so unpopular that the Parliament prohibited the granting of monopolies, and the queen revoked the most obnoxious of them and allowed the rest to be litigated in court.[8, 9]

In succeeding years, both statutes and court cases[10] drew a distinction between illegal monopolies and letters patent for a new invention.[11] Monopolies were considered to be contrary to public policy and were made illegal,[12] but the

---

[5] Lipscomb, *op. cit.* at page 7.

[6] Elizabeth I was not the first to grant monopolies. State-awarded monopolies of iron and salt were established in China in the second century B.C. *See*, Wagner, Donald B., *The State and the Iron Industry in Han China* (Nordic Inst. of Asian Studies 2002) at 8 *et seq*.; also see Wagner, Donald B., "Technology as seen through the case of ferrous metallurgy in Han China," http://donwagner.dk/EncIt/EncIt.html, accessed August 13, 2013.

[7] Lipscomb, *op. cit.* at 9.

[8] Lipscomb, *op. cit.* at 13.

[9] Monopolies came into disfavor in a number of locations: the salt and iron monopolies of Han China were abolished, reinstated, and finally abolished again in the first century A.D. In a proclamation in the year A.D. 480, the Byzantine Emperor Zeno outlawed monopolies: *Iubemus ne quis prosua authoritate, vel sacro elicito rescripto, etc. Monopolium audeat exercere*, quoted in Misselden, Edward, *Free Trade or, The Meanes To Make Trade Florish* (1622), http://socserv.mcmaster.ca/~econ/ugcm/3ll3/misselden/freetrad.txt, accessed August 13, 2013. ("We order that no one will dare exercise a monopoly … of his authority or drawn from sacred rescript.") *Also cited in* Choate, Robert A., *Cases and Materials on Patent Law 2d* (West Group 1981).

[10] England is a *common law* jurisdiction, which means that legal interpretations by appellate judges are binding on lower courts in other cases involving the same legal principles.

[11] See, *Darcy v. Allin* (The Case of Monopolies), 11 *Coke* 84b, 77 Eng. Rep. 1260 (1602).

[12] In England, this was accomplished by the Statute on Monopolies 1623, which made a specific exception for patents and grant of privilege for the term of fourteen years or under "for the sole working or making of any manner of new Manufactures within this Realm, to the true and first Inventor and Inventors of such Manufactures, which others at the tyme of making… shall not use,"

prohibition on monopolies did not extend to a patent for a new invention because the patent for a new invention deprived the public of nothing it previously had. That is, a patent for a new invention deprives the public of nothing because the subject of exclusive rights—the invention—did not previously exist. This argument has been cited in a number of cases. *See, e.g., United States v. Dubilier Condensor Corp*., 289 U.S. 178 (1933), which can be found online: "An inventor deprives the public of nothing which it enjoyed before his discovery, but gives something of value to the community by adding to the sum of human knowledge."

An invention thus confers a public benefit by encouraging the inventor to disclose a new invention in exchange for the exclusive right to exploit that invention for a limited period of time. These three features—(1) a grant of exclusive rights by the government (2) for some new thing and (3) for a limited period of time—form the basic elements of the modern patent system.

> Thou shalt not have in thy bag divers weights, a great and a small. Thou shalt not have in thine house divers measures, a great and a small. But thou shalt have a perfect and just weight, a perfect and just measure shalt thou have: that thy days may be lengthened in the land which the Lord thy God giveth thee. For all that do such things, and all that do unrighteously, are an abomination unto the Lord thy God.
>
> —*Deuteronomy 25:13-16*

The development of trademark and unfair competition law arose from similarly ancient roots. Ancient laws regulated the behavior of merchants, especially as it concerned contracts and weights and measures.[13] Businesses have used signs to identify their services, and artisans have used marks to identify their goods, for thousands of years. Drawings in Egyptian tombs show workers branding cattle, and quarry marks have been found on Egyptian structures dating from 4000 B.C.[14] In ancient Greece, potters signed their works, initially with the mark of their clans and later with their own names.[15]

---

provided they are "not contrary to the Lawe nor mischievous to the State ...." *See* http://www.legislation.gov.uk/aep/Ja1/21/3 to read the original Statute.

[13] The Book of Deuteronomy was written around 700 B.C. *See, e.g.,* Bradshaw, Robert I., *Deuteronomy*, (1998) http://www.robibrad.demon.co.uk/deut.htm, accessed August 13, 2013. Other authors adopt dates ranging from approximately 1450–950 B.C.

[14] 1 McCarthy on Trademarks and Unfair Competition 3d §5.01.

[15] Skoyles, *op.cit*.

The practice of marking goods was carried on in Europe through guilds. Guilds maintained quality standards and regulated the conduct of their members, sometimes to the detriment of the community. Guild rules prohibited such unfair acts as enticing the customers or workers of another guild member, principles that are reflected (somewhat differently) in modern laws prohibiting false disparagement of the goods of another or soliciting breach of contract. To maintain their monopoly in a particular market, guilds took steps to guarantee the quality of their goods and prevent dishonest dealing, in some cases by establishing a system of inspections.[16, 17]

Modern intellectual property systems largely assumed their basic structure by the nineteenth century, although the process of making improvements continues today. Two major treaties on intellectual property were adopted during that period: the Paris Convention for the Protection of Industrial Property on March 20, 1883, and the Berne Convention for the Protection of Literary and Artistic Works on September 9, 1886.

The adoption of intellectual property systems in many countries, and especially the growing need to address intellectual property issues in international trade, prompted greater international cooperation in the field of intellectual property. By the early twentieth century, many countries had adopted modern patent, trademark, and copyright laws, the Berne and Paris Conventions had been amended, and a number of other agreements had been adopted to meet changing needs for international cooperation. Egypt became one of the first countries in the Near East or Africa to adopt a modern intellectual property system, adopting a trademark law in 1939, a patent law in 1949, and a copyright law in 1952. Those laws were superseded by Law 82 for the Year 2002, when Egypt adopted a new, comprehensive intellectual property law in accordance with its membership in the World Trade Organization.

---

[16] Rempel, Gerhard, "Guilds and Commerce" (lectures), (2000), reproduced at http://www.dreamspinnersinc.com/dragpics/Guilds%20and%20Commerce.htm, accessed August 13, 2013.

[17] For original guild rules, see items 11 and 12 in Wiesner-Hanks, Merry E., "Early Modern Europe, 1450–1789" in *Cambridge History of Europe, 2nd Edition*, http://www.cambridge.org/features/wiesnerhanks/downloads/primary_sources/Primary_sources_CH01.pdf. For a simple description of the Medieval guild system, *see* Jariwala, Nikhil, "Medieval Professions," (1998), http://web.nickshanks.com/history/medieval/careers.

CONCEPTUAL FRAMEWORK

One way to approach the subject of intellectual property is to consider the type of subject matter that is protected and the policy objective that each form of intellectual property supports. Traditionally, industrial property was thought of as relating to business and industry and copyright as relating to culture. Inventions are largely in the province of science and engineering, agriculture and industry. The protection of marks and the repression of unfair competition chiefly serve as business tools. Music, art and literature are protected by copyright and are of interest to artists and academics.

To some extent, this division still holds, although recent advances in technology have eroded the utility of this traditional division. Copyright still protects "literary works," but literary works now include computer programs, databases, and technical manuals as well as textbooks, novels, and poetry. Works of visual art include technical drawings as well as works of fine art. At the same time, artists who create original designs for the appearance of useful objects may rely on the protection of industrial designs, a form of protection that is squarely in the field of industrial property.

INDUSTRY OR CULTURE?

Eiffel Tower. Engineers Emile Nouguier and Maurice Koechlin proposed to build a metal tower for the 1889 World's Fair. Gustave Eiffel reached an agreement with these engineers and registered a patent for "a new design for building metal pylons to a height of more than 300m."

Statue of Liberty. Frédéric Auguste Bartholdi, a sculptor, received U.S. Patent No. 11,023 for a "Design for a Statue" for his work, *Liberty Enlightening the World*, better known as the Statue of Liberty. Bartholdi also received U.S. copyright registration number 9939-G for his work, which was at that time called "Statue of American Independence."

Another way to approach the field of intellectual property is to look at the policies served by each form of protection. At root, intellectual property is based on two policies that are beneficial to society: encouraging the disclosure and development of new things, and ensuring honest dealing in commercial matters.

Laws that provide exclusive rights serve the public interest by encouraging disclosure. Disclosure gives the public access to new things and promotes progress by allowing others to build on what has been disclosed. Protecting the interests of

the innovator and offering the possibility of a reward encourage innovators to invest the time and resources needed to take their creative activities from a mere idea to something tangible that can benefit the public. Without the protection afforded by intellectual property laws, it would be impossible, in most cases, for innovators to share their creative works without jeopardizing their own ability to benefit from their creative efforts.

Laws on trademarks and the repression of unfair competition serve the public interest by discouraging dishonest business practices. This protects parties to commercial transactions against unscrupulous dealing and allows both merchants and the public to rely on representations made by commercial entities. Clear rules on acceptable business conduct and the availability of effective remedies reduce the risk of investment and create a more orderly and efficient market—conditions essential for fair competition and economic growth.

Looking at the policies served, patent law is more akin to copyright and related rights than to trademarks or the repression of unfair competition. Both have the objects of encouraging those who are capable of creating new things—inventions or works of authorship—to invest the time and resources necessary to bring their creations from a strictly mental existence to a tangible form and to share those creative works with the public. To achieve these ends, governments strike a bargain with the creator: make the necessary investment to create a new invention or work of authorship, and you may prevent others from exploiting it without your permission for a period of time specified by law, even though the invention has been disclosed or the work has been published.

Laws concerning marks and the repression of unfair competition serve related policies. Trademarks promote honest commercial practices by identifying the source of goods (that is, the manufacturer or the retail merchant who supplies the goods). Trade names serve a similar purpose of identifying a business entity. Business practices that deceive consumers as to the source of goods are a classic example of unfair competition, as are other deceptive and unfair practices such as falsely disparaging the goods or services of a competitor, false labeling or advertising, or copying the trade dress—distinctive packaging—of a competitor so as to mislead consumers.

Unfair competition laws also protect trade secrets against discovery through unfair or dishonest means. Both consumers and merchants have a stake in honest commercial practices. Although the field of unfair competition law originally developed to regulate relations among merchants, most of the same considerations

affect consumers, and this branch of law is now often implemented as consumer protection law.

INTELLECTUAL PROPERTY AS A TOOL

Probably one of the most useful ways to approach intellectual property law is to view it as a tool. Properly applied, intellectual property law can help to increase the value of intellectual creations and promote economic development. It can help turn an idea into a valuable commodity, protect an investment of labor, creativity, or capital, help a fledgling business establish market share and develop a reputation for excellence, and offer the security needed to obtain financial assistance. The task of the intellectual property practitioner is to identify aspects of ideas and information that can be legally protected, determine which forms of protection will be useful to the client, and assist clients in acquiring that protection.

> If nature has made any one thing less susceptible than all others of exclusive property, it is the action of the thinking power called an idea, which an individual may exclusively possess as long as he keeps it to himself; but the moment it is divulged, it forces itself into the possession of everyone, and the receiver cannot dispossess himself of it.
>
> —*Thomas Jefferson, U.S. president and inventor*

The law does not protect every creative act or regulate every aspect of business. Ideas are valuable, and yet intellectual property law does not protect *ideas per se*. Only certain embodiments of an idea receive legal protection. The mere idea for a new product cannot be patented, but its completed conception, including how to make and use the product, may be a patentable invention.

Likewise, information is valuable, but intellectual property law does not protect *information per se*. *Undisclosed information* may be protected against unauthorized disclosure, even where it may be permissible to disclose certain elements of that information. Copyright protects the form in which ideas and information are expressed but not the idea or information disclosed in a work.

These important distinctions are explored in greater depth below.

MORAL OR NON-ECONOMIC RIGHTS

Although intellectual property is chiefly exploited as a business tool, it also recognizes certain moral rights (*droit moral*, plural *droits moraux*). The concept of

moral rights is chiefly implemented in the area of copyright, where authors have the right to exercise certain types of control over their works to prevent actions that would be prejudicial to their honor or reputation. These non-economic rights include the right to be known as the author, and to prevent false attributions of authorship, as well as to prevent changes in certain types of works that would tend to damage the author's reputation. These rights are discussed in more detail in the chapter on copyright. For inventions, the chief non-economic right is the right of the inventor to be named as such in any patent application that may be filed. A doctrine of moral rights is less fully developed with regard to newer forms of intellectual property, although principles of unfair competition law may sometimes offer nearly equivalent rights.

DISCLOSURE

The disclosure of new creative works is important because disclosure places new ideas and information into the public arena, where others may begin to build on them. Inventors and authors are not required to disclose their creations. They may choose to maintain inventions or data as trade secrets or "undisclosed information" or to maintain works of authorship as unpublished works.

If, however, an inventor wishes to obtain statutory protection for an invention, the invention must be fully disclosed. Disclosure is an essential element of the patent system—part of the *quid pro quo* for obtaining exclusive rights. Inventors must choose whether to maintain a new invention as undisclosed information or to rely on statutory forms of protection such as patents.

The requirement of disclosure does not apply to copyright. Authors have copyright protection for their works of authorship even if those works are unpublished.

INTELLECTUAL PROPERTY AND ECONOMIC DEVELOPMENT

Improvements in a country's intellectual property framework have been linked to its economic development. Moreover, the impact of improvements in a country's intellectual property system can be dramatic. For example, a number of studies have shown that intellectual property protection positively affects the per capita growth of a country's gross domestic product (GDP). One common method of evaluating the economic impact of intellectual property rights (IPR) is to make comparisons based on an "IPR scale" or index that incorporates several important elements of the intellectual property system.

Using this method, economists Abdul Sattar and Tahir Mahmood analyzed the impact of intellectual property rights on economic growth in a balanced panel of 38 high-, middle-, and low-income countries over the period 1975–2005. Although the most dramatic increases occurred in high-income countries, Sattar and Mahmood found that "intellectual property rights contribute to economic growth positively and significantly in the full sample of countries" and that strengthening intellectual property by one unit on the scale used in the study correlated with a per capita increase in GDP of about 0.8 percent.[18]

Also using an IPR scale, Melissa Ginsberg looked at the effect of intellectual property in 15 transition economies[19] (that is, economies in countries transitioning from a centrally planned economy to a market economy) and found that stronger protection of intellectual property rights "appears to have a strong positive effect on the economy, with per capita growth rates increasing upwards of 1 percent for a one standard deviation increase" in protection.

How does intellectual property promote economic development? At the microeconomic level, patents, copyright, and other forms of intellectual property provide a means by which innovators and investors can recover the investment of time and money needed to bring a new product to the market. Legal protection of intellectual property is offered to create an economic incentive for disclosure and investment. Exclusive rights reduce the risk of investment and facilitate entry of new businesses and new products into the market. Laws prohibiting unfair competition protect against unscrupulous dealings and allow honest merchants to develop a reputation for quality, thereby increasing their sales and promoting employment. These factors contribute to an environment that is conducive to economic growth.

---

[18] Sattar, Abdul, and Mahmood, Tahir, "Intellectual Property Rights and Economic Growth: Evidences from High, Middle and Low Income Countries," *Pakistan Economic and Social Review*, Vol. 49, No. 2 (Islamabad, Winter 2011) at pages 179–181, available at http://pu.edu.pk/images/journal/pesr/ PDF-FILES/2%20SATTAR%20Intellectual%20Property%20 Rights%20 and%20Economic%20Growth.pdf, accessed July 26, 2014.

[19] Ginsberg, Melissa, "The Effects of Intellectual Property Protection on Growth in Transition Economies," (senior thesis, Amherst, MA, May 6, 2005), available at *https://www.amherst.edu/media/view/7739/original/Ginsberg05.pdf*.

To obtain a patent, an inventor is required to make a technical disclosure that will enable persons skilled in the relevant area of technology to make and use the invention. That ensures that, at the end of the patent term, anyone with the relevant technical skills will be able to exploit the invention without permission from the patent owner.

Disclosure makes that knowledge available to others who would build on it. This is important because economists have found that long-term economic growth is largely due to technological change.[20] Economics Nobel Laureate Robert Solow of the Massachusetts Institute of Technology studied the U.S. non-farm economy during the period 1909–1949 and concluded that the bulk of the increase of economic output in the United States, other than that due to increasing population and consequent increasing work force, was the result of technological advances.[21]

The other major theme of intellectual property is ensuring honest dealings—between merchants, and between merchant and consumer. The Paris Convention refers to this aspect of intellectual property as "the repression of unfair competition." Preventing dishonest and deceptive practices, and offering effective remedies when they occur, is essential to promoting economic growth. It can be seen most clearly in markets with inadequate regulation that the absence of protection slows sales, as consumers are more cautious about purchases when they lack confidence in merchants and know that they have no assurance of a remedy if goods are not as promised. The absence of effective protection against dishonest acts also makes it more difficult for merchants to establish new businesses, as distrustful consumers are reluctant to take a chance on an unknown vendor, particularly for expensive merchandise.

Finally, it is difficult for merchants to establish a reputation for honesty and quality if the market permits such acts of unfair competition as trademark infringement, palming off goods as those of another or falsely disparaging a

---

[20] Mansfield, Edwin, "Intellectual Property Rights, Technological Change, and Economic Growth," Walker, Charls E., and Bloomfield, Mark A, *eds*., *Intellectual Property Rights and Capital Formation in the Next Decade* 5–6, American Council for Capital Formation Center for Policy Research (University Press, Lanham, MD, 1988).

[21] Walker and Bloomfield, *op. cit.* at 100.

competitor. This is clearest with trademark counterfeiting,[22] where the manufacturer of a quality product may learn of the existence of counterfeit products from complaints of disappointed consumers who purchased a counterfeit item in the belief it was genuine.

At a macroeconomic level, intellectual property promotes economic development by encouraging domestic innovation and foreign direct investment, which represents a major source of technology transfer. The ability to attract foreign direct investment is also an important factor in economic growth because the establishment of new enterprises increases employment and often leads to increases in exports and the development of new domestic businesses related to the foreign investment. The intellectual property system creates a framework in which developing countries can participate jointly in the economic activities of the developed world.

A country's ability to attract foreign investment is related to the strength of its intellectual property system. In a study for the World Bank, the eminent economist Dr. Edwin Mansfield surveyed 100 major U.S. firms in six manufacturing industries to determine the importance of intellectual property in influencing decisions to make various types of investments. The percentage of these firms indicating that intellectual property protection has a major effect on their foreign direct investment decisions is shown in Table 2.[23]

---

[22] Trademark counterfeiting is a form of infringement in which a protected mark is copied identically or in a form that cannot be distinguished in its essential aspects from such the protected trademark. There is therefore a high likelihood that consumers will be misled as to the producer of the goods.

[23] Mansfield, Edwin, "Intellectual Property Protection, Foreign Direct Investment, and Technology Transfer," IFC Discussion Paper No. 19, World Bank, http://www-wds.worldbank.org/external/default/WDSContentServer/WDSP/IB/1994/02/01/000009265_3970311123634/Rendered/PDF/multi_page.pdf, accessed July 31, 2014.
Also see Mansfield, Edwin, Intellectual Property Protection, Direct Investment, and Technology Transfer, Germany, Japan, and the United States, IFC Discussion Paper No. 27 (1994), World Bank, http://www-wds.worldbank.org/external/default/WDSContentServer/WDSP/IB/1995/09/01/000009265_3961219105244/Rendered/PDF/multi_page.pdf, accessed July 31, 2014.

Table 2. Percentage of Firms Saying that Intellectual Property has a Major Effect on their Investment Decisions, by Industry and Type of Facility

Industry	Sales and Distribution	Rudimentary Production and Assembly	Manufacturing of Components	Manufacturing of Complete Products	Research and Development	Mean
Chemical	19	46	71	87	100	65
Transportation equipment	17	17	33	33	80	36
Electrical equipment	15	40	57	74	80	53
Food	29	29	25	43	60	37
Metals	20	40	50	50	80	48
Machinery	23	23	50	65	77	48
Mean	20	32	48	59	80	48

Source: Edwin Mansfield, *Intellectual Property Protection, Foreign Direct Investment, and Technology Transfer, IFC Discussion Paper No. 19, World Bank. Used by permission of the World Bank/IFC.*

While responses varied on the degree of importance companies assigned to intellectual property, intellectual property was a factor in the decisions of every industry and weighed more heavily for types of investments that transferred more technology.

The relationship between intellectual property and foreign direct investment was shown even more dramatically in a study commissioned by the World Intellectual Property Organization (WIPO). William Lesser of Cornell University studied the effect of intellectual property on economic development in 44 developing countries. Applying an "IPR score" based on several important elements of the intellectual property system, Lesser found that "[a] one point increase in the IPR score (about 10 percent) would on average increase FDI [foreign direct investment] by $1.5 billion."[24]

INTELLECTUAL PROPERTY AND COMPETITION

Intellectual property promotes competition in several ways. The exclusivity offered by statutory forms of protection makes it possible to introduce new products without the risk that an established, larger business will immediately copy the innovation and drive out the fledgling business. By encouraging the development of new things, intellectual property helps to diversify the market, offering consumers more choices. The prevention of acts of unfair competition also makes it easier for new business to be established, further diversifying the market. The protection of marks encourages businesses to develop quality products and adopt consumer-friendly policies.

It is sometimes asserted that intellectual property creates monopoly rights that restrict competition. In fact, the temporary period of exclusive rights provided by intellectual property does not amount to a monopoly, for a number of reasons. As discussed above, the temporary exclusivity afforded to an inventor is distinguishable from a monopoly because the rights apply only to something new and therefore deprive the public of nothing it has had before. The protection

---

[24] Lesser, W., *The Effects of TRIPS-Mandated Intellectual Property Rights on Economic Activities in Developing Countries*, (Ithaca, NY, April 17, 2001), available at www.wipo.int/about-ip/en/studies/pdf/ssa_lesser_trips.pdf.e interpreted to Lesser cautions that "this result should not b mean that amount would apply to any particular country, but the direction of the effect is quite robust."

afforded to trademarks, geographical indications, and similar forms of protection used in marketing goods promote competition by ensuring that consumers are able to exercise their broader choices more freely.

It is also incorrect to speak of intellectual property rights as monopolies from an economic perspective because the existence of a monopoly implies control over a sector of the market, a situation that rarely applies when a new product is introduced into the market. New brands of existing goods must compete with better established brands, and in most cases, inventions must compete for market share with older technology. A new tool may make it easier to perform a task, but that task can still be performed in the traditional manner, without the necessity of dealing with the patent owner. A new process may be more efficient, but the old process is still available for use, without permission of the patent owner. One has only to look on the shelves of a store to see that existing products continue to be sold even after the introduction of newer products of the same type.

Of course, the existence of a patent does not prevent a company from misusing its intellectual property to stifle competition, nor does it prevent a company from otherwise engaging in monopolistic behavior. However, the availability of competing goods means that a patent or other form of exclusive rights does not, in itself, create a monopoly.

INTELLECTUAL PROPERTY AND THE PUBLIC INTEREST

On the whole, the public interest favors strong protection of intellectual property. A strong intellectual property system promotes innovation, which benefits the public by offering solutions to problems. By offering a system of exclusive rights, the intellectual property system creates an environment in which an innovator can compete with existing concerns. This promotes a more diverse market.

INNOVATION AND PUBLIC BENEFIT

Social return is the term that economists use to describe the benefit from an investment received by society as a whole, as opposed to the *private return* that may be achieved by the owner of the new work.

The central policy debate in intellectual property is between critics of the intellectual property system and advocates of strong intellectual property protection. Critics sometimes argue that particularly valuable and useful creations are so necessary to the public, or serve such an important public interest, that they

should be made freely available to the public, while advocates argue that denying or weakening protection undermines the intellectual property system and jeopardizes the ability to obtain future benefits.

On the whole, the balance of the argument is in favor of advocates of intellectual property rights. However, as with any form of property right, there are situations in which private rights must give way to urgent needs. Such situations are best addressed narrowly, as exceptions that help to define the limits of a general policy that provides strong protection. Exceptions will be addressed in later sections.

One public interest served by intellectual property is to encourage the making and development of inventions. Several studies have been conducted to measure the social return from innovations. Typical results were reported in a study conducted by Nathan Associates, which found a social rate of return of 70 percent.[25] By contrast, the private rate of return is substantially lower, less than half the social rate of return,[26] meaning that the public derives more benefit from innovations than the inventor does.

This disparity between the high social rate of return on an investment in new technology and the relatively low private rate of return occurs because much of the return from an innovation is appropriated by imitators. One study found that imitators gain access to details concerning new products and processes rapidly, often within a year of their development.[27]

The intellectual property system makes it possible to derive a private benefit from an innovation. It encourages the necessary investment of time and other resources by allowing innovators to capture some of the economic benefit of their innovations. If there is no prospect of a reward, inventors may devote their efforts to some activity other than making and perfecting an invention or, having made the invention, they may choose to keep it secret.

---

[25] Robert R. Nathan Associates, "Net Rates of Return on Innovations," reported in Walker and Bloomfield, *op.cit*. at 6.

[26] E. Mansfield *et al.*, "Social and Private Rates of Return from Industrial Innovations," *Quarterly Journal of Economics* (May 1977), cited in Walker and Bloomfield, *op.cit.* at 8.

[27] E. Mansfield, "How Rapidly Does New Industrial Technology Leak Out?" cited in Walker and Bloomfield, *op. cit.* at 8.

From a policy perspective, the rewards of the patent system work as an incentive only prospectively. That is, the incentive that is offered is exclusive rights and the prospect of whatever benefits may be derived from those rights. Once a new thing is made and disclosed, the public has had the benefit of its bargain.

Having held out the prospect of a reward, a government that then reneges on its bargain by denying or limiting the exclusive rights accorded by a patent runs the risk that it will destroy confidence in the system that encouraged the making of the invention. Such actions should be taken only rarely, for compelling reasons, and under strict limitations that do not threaten confidence in the patent system itself.

Public policy favors offering the greatest incentives—and therefore the greatest protection—for the most important inventions. However, it is these inventions that most tempt governments to invade the patent right. Denying the benefits of the patent system because an invention is highly beneficial to the public creates a disincentive to the making of important inventions and encourages inventors to restrict their time and energy to unimportant inventions. Moreover, it encourages inventors and businesses to seek ways to profit from their inventions without making the disclosure required by the patent system.

Invading the patent right is counterproductive in another way: it discourages investment that may be necessary to make the benefits of an invention available to the public in a practical way by placing a product on the market or putting a process into commercial use. Most inventions require some degree of investment to convert them from a completed concept to something of benefit to the public.

Even a relatively simple mechanical device typically requires some investment to move from the laboratory bench to the market. Development of an invention involves such steps as building a working model or demonstrating proof of principle, identifying a suitable manufacturing technique, identifying possible manufacturers, possibly investing in specialized manufacturing equipment, scaling up to commercial-scale production, and developing a distribution network. Production of a mechanical device often requires the creation of special tools, dies, or molds as well as the assembly of the parts of the device.

“Scaling up” chemical processes from small quantities produced in a laboratory (sometimes referred to as the *bench*) to the larger quantities of commercial-scale (or batch) production can be complex. It may require a study of the chemical kinetics of the process, that is, the rate at which a chemical reaction occurs and the details of that reaction. A reaction may be easily controlled when done with small

amounts of the chemical but behave differently when done on a larger scale. A larger-scale reaction may, for example, generate large amounts of heat, explode, or expose workers to unsafe amounts of toxic chemicals. In addition, governments may require testing of pharmaceutical and agricultural chemical products and submission of test data before the product can be marketed. Such testing serves important social policies but is expensive and raises the price of taking an invention to market.

Some inventors may feel that they do not need the patent system because they are driven by altruistic purposes—the desire to find cures for diseases, for example, or to help humanity in some other way—rather than a desire to make money from their work. However, they may still need investors to support the development of their inventions from concept to the point that the invention can be made them available to the public. Even if the inventor is indifferent to financial incentives, potential investors have a great interest in the likely financial prospects of the venture. Without the ability to obtain investment in the development of new inventions, a good idea may remain exactly that—an idea, not a product.

Businesses are reluctant to invest in new technology, especially technology that will require a substantial investment to make it marketable, if they are not able to obtain some degree of exclusivity. Experience with government-owned inventions offered for license on a nonexclusive basis shows that they are rarely commercialized.[28] Inventions that are market-ready when offered for license are an

---

[28] This finding was based on a study of more than 28,000 inventions owned by the U.S. Government. The study found that the rate of commercialization was more than ten times as high when ownership was given to the government contractor. Harbridge House Inc., *Government Patent Policy Study for the FCST Committee on Government Patent Policy*, May 15, 1968, Vol. II, Parts II and III. Although the study has been criticized, it is one of the few studies on this subject.

For more on this topic, *see, e.g.*, Ganz, Carole, *United States Patent Policies for Government-Supported Research*, (NSF 1982); Congressional Budget Office, *Federal Support for R&D and Innovation*, (April 1984), at page 86, http://books.google.com/books?id=EUCDQEwo_ KAC&

printsec=frontcover#v=onepage&q&f=false, accessed August 13, 2013; Bremer, Howard W., *University Patent Policy Evolution and Revolution*, Council on Government Relations, http://www.ipadvocate.org/assistance/go/pdfs/2.5.4a_Uni%20Tech%20Evolution.pdf, accessed August 13, 2013; Eisenberg, Rebecca S., "Public Research and Private Development," *82 Va. L. Rev.* 1663 (1996). *Also see* "Introduction to Commercialization of Patented Inventions (Different Options: Manufacturing, Licensing Patent Rights, Selling Patent Rights)," (WIPO/IFIA/KUL/96/1, August 1996), http://www.wipo.int/edocs/mdocs/innovation/en/wipo_ifia_kul_96/wipo_ifia_kul_96_1.doc, accessed August 13, 2013, at page 4: "[O]nly a very small percentage (5 to 7 percent) of all

exception to this experience. Only in exceptional cases, however, will industry make the investment to bring the results of basic research to the market without a guarantee of exclusive rights.

When businesses are not likely to be able to obtain exclusivity over a new invention in order to recover their investment and realize a reasonable profit, they sometimes become very creative about marketing in ways that allow them to maintain their inventions as undisclosed information. Processes are easiest to keep secret. Chemical formulae are also relatively easy to keep secret. It is more difficult to exploit a mechanical device and still maintain it as secret, although even mechanical devices can be protected against disclosure in some cases. When it is not possible to obtain sufficient statutory protection to enable inventors and developers to recover their investment, the likely result is not that the invention will be developed and given to the public freely, but that the public will never receive the benefit of the invention.

Most discussion of the policy implications of exclusive rights concerns patents for inventions, but there are also policy arguments concerning other forms of intellectual property. The repression of unfair competition serves the policy of protecting merchants and consumers. Imitation of marks not only deprives the proprietor of the benefits of goodwill and reputation acquired through the owner's efforts but also deceives the public. Copying of marks is against public policy, whether it involves mislabeling of essential goods or the imitation of luxury items. Even if the consumer is not deceived and knowingly purchases a counterfeit item, the proprietor of the mark is cheated, and proceeds from such sales often perpetuate organized criminal activity.[29]

---

inventions for which patents have been granted reach the commercialization phase of the innovation process. The great percentage of failure is usually not due to the quality of the invention, but rather the result of the influence of other factors, such as, for example, the high investment cost for a relatively small effect, need of additional R&D work, the manufacturing and technological environment are not yet ripe for such invention, no real market need, etc. But the history teaches us that that will not stop creative people from inventing and trying to commercialize their inventions."

[29] *See, e.g.*, *Union des Fabricants*, "Counterfeiting & Organised Crime," (Paris 2003), http://www.gacg.org/Content/Upload/Documents/rapport_uk.pdf, accessed July 26, 2014. INTERPOL has also taken note of this issue; *see, e.g.*, "INTERPOL targets organized crime with global initiative against trafficking in illicit goods," http://www.interpol.int/News-and-media/News/2012/PR050, accessed July 26, 2014.

A discussion of intellectual property policy would be incomplete if it failed to acknowledge arguments against strong protection. One line of criticism is directed against intellectual property as private property and its role in the generation of wealth. Under a communist or socialist regime, in which private ownership of property was disfavored, the former Soviet Union and a number of other socialist countries experimented with an alternative system of rewards called inventor's certificates. This system adopted the economic principle of providing an incentive for the development of new creations without creating personal property rights in an invention. The holder of an inventor's certificate was guaranteed a reward by the government in proportion to the value of the invention, but without the economic engine of a market economy, the system failed to promote development at the same rate it occurred in countries that relied on exclusive rights and a market economy to provide rewards.[30]

Most nations of the world did not adopt that approach, and many former socialist countries are now struggling to build a market economy that includes a strong intellectual property system that will promote their economic development.

Another argument against intellectual property asserts that the exclusivity afforded by some forms of intellectual property, such as patents, creates a monopoly and raises prices. As discussed above, such rights do not create a monopoly. However, determining the role of intellectual property in the pricing of goods is not a simple economic exercise. Economists who have studied the pricing of goods find that different models apply to different types of goods, with some goods being introduced at low market prices until the market is established and others being introduced at higher prices that fall as newer goods are introduced.

One common flaw in attempts to analyze the effect of patents or other intellectual property rights on the price of goods is the assumption that patented goods would be equally available if patent rights were abolished, restricted, or limited. This is an unwarranted and risky assumption, given what is known about business behavior in countries with limited protection for intellectual property. It is also difficult to determine how intellectual property affects prices, because there is no single economic model that predicts pricing behavior for all industries.

---

[30] For more information on inventor's certificates, *see* K. Zweigert, *ed*., *International Encyclopedia of Comparative Law*, Installment 31, page 18 *et seq*., (The Hague, Boston, London 1983).

In general, it is fair to say that intellectual property protection allows innovators to set a price for which they are willing to sell their goods, but it does not guarantee that consumers will be willing to purchase the goods at that price, or for that matter, to purchase the goods at all. Except where prices are regulated, it is the market itself that sets the price of goods. This issue is addressed in a subsequent chapter with regard to pharmaceutical products.

TECHNOLOGY TRANSFER AND SHARING BENEFITS

The other major theme of debate concerns the role of intellectual property in the distribution of wealth between rich and poor nations. While all sides agree that a strong intellectual property system promotes domestic innovation, some opponents of strong intellectual property protection argue that in developing countries, this advantage is outweighed by the value of knowledge available from other sources, such as developed countries. In an unequal world, critics argue, the adoption of uniform norms of protection perpetuates an uneven distribution of information resources.[31]

In a static environment, sealed against the flow of information, such an argument might have merit. However, information is transmitted across national borders by a variety of methods, including patent disclosures; foreign direct investment; joint ventures, mergers, and other business arrangements; direct purchases of technology; and licensing and franchise arrangements.

The patent system itself provides one important means of transferring technology: through the publication of patent disclosures. Patents provide a wealth of technical information, much of which is not available elsewhere in the technical literature, and much of it is available online at no cost.[32]

Foreign direct investment offers another means of transferring technology. Technology diffuses when companies establish sales outlets, manufacturing facilities, and research and development facilities in a foreign country. These types of investment create jobs, add to a country's knowledge base, and spur the

---

[31] Cortes Costa, Mauricio Eduardo, "A View From Brazil," *Walker and Bloomfield, op. cit.* at 61.

[32] Studies have found that approximately 80 percent of patents contain some technical information that is not published elsewhere. *See* "Patents as a Source of Technological Information in the Technology Transfer Process," WIPO/GRTKF/IC/6/INF/4 (March 18, 2004).

development of other businesses, often to provide goods or services to the facility established by the investor. Foreign direct investment is an extremely significant factor in the diffusion of technology since most technology is owned by the private sector. As pointed out above, investment decisions depend heavily on the level of protection of intellectual property accorded in each country.

Licensing also plays a significant role in the transfer of technological information. A major advantage of the intellectual property system is that it allows for the separation of some types of information or knowledge from the control of that information or knowledge. This creates a situation in which the proprietor of intellectual property can share technical information, such as the details of an invention or manufacturing know-how, without losing the ability to derive a benefit from that information. The advantages of this system are dramatically shown by the development of Korea's automotive industry, as fledgling Korean enterprises built on technology licensed (or shared under a joint venture agreement) from existing automotive companies.[33] Without the protection of the intellectual property system, it is unlikely that foreign automotive manufacturers would have been willing to share their technology with a potential competitor.

One special arrangement for the transfer of knowledge is the franchise agreement. A franchise is a complex license agreement that authorizes the franchisee to use a mark and other intellectual property specified in the agreement in accordance with certain conditions. A franchise is an effective means of transferring technology, using intellectual property law for its legal framework. Another advantage of a franchise is that it provides the franchisee with a total business system that has been proven to work. Perhaps most important, a franchise arrangement gives the franchisee the opportunity to take part in an enterprise with an established reputation and, in many cases, a legal means to make use of a well-known trademark.

Rather than perpetuating inequities in knowledge, the intellectual property system creates a framework that allows developing countries to gain access to a vast volume of technological information and to share in the wealth of the developed world.

---

[33] Greenbaum, Alex and Swanson, Ulrika, "The Globalization of the Korean Automotive Industry," Economic Strategy Institute (Washington, 2002.)

INTERNATIONAL COOPERATION

Governments have expressed concern about intellectual property protection on an international scale since at least 1883, when the Paris Convention for the Protection of Industrial Property was adopted. In succeeding years, a number of treaties and other international agreements were adopted to address issues of concern and simplify the process of obtaining intellectual property protection in foreign countries. For the most part, however, these treaties had relatively little effect on the national laws of the nations of the world and did not contain effective provisions to address noncompliance by member states.

Beginning in the 1980s, a new approach was taken when intellectual property was considered in the context of trade. In trade terms, the failure to provide adequate and effective intellectual property protection was considered a non-tariff trade barrier—that is, a means to exclude goods or make them more costly other than by imposing customs duties. Non-tariff trade barriers are prohibited under the General Agreement on Tariffs and Trade (GATT), which offered an attractive forum for raising intellectual property issues since it has specific dispute resolution provisions. In this context, negotiations took place that led to the development of the World Trade Organization (WTO).

The Agreement Establishing the World Trade Organization (WTO Agreement) contains a number of annexes that address specific topics of importance to the WTO's 159 Members (as of March 2, 2013). Among these is the TRIPS Agreement—the Agreement on Trade-Related Aspects of Intellectual Property Rights—which contains a comprehensive set of intellectual property norms to which WTO Members agree to conform their national laws.

INTELLECTUAL PROPERTY DEFINITIONS

Intellectual property is generally divided into two main branches: **industrial property** and **copyright**. Industrial property comprises inventions, marks, and the repression of unfair competition. Copyright relates to works of authorship.

An **invention** is a new development in any field of endeavor. An invention is typically a new device, process, composition of matter, or an improvement on any of these. A **patent** is a government grant of exclusive rights in the invention for a limited period of time, in exchange for which the inventor must disclose the invention to the public. To be patentable, an invention must be new, useful (or industrially applicable), and not an obvious improvement over previously known inventions (that is, it must have an inventive step).

An **industrial design** is any composition of lines or colors, or any three-dimensional form that gives a special appearance to and can serve as a pattern for a product of industry or handicraft. An industrial design is generally protected if it is new or original and not dictated solely by technical or functional features.

A **mark** is any sign or combination of signs capable of distinguishing the goods or services of one undertaking (that is, a person or business) from those of another. The terms "mark" and "trademark" include service marks, which are marks used in connection with services.

A **collective mark** is a mark used by members of a collective association to show membership in the organization, or that goods or services were produced or provided by members of the association.

A **certification mark** is used to identify an undertaking that certifies that another party, or that party's goods or services, have met certain standards as to their characteristics or quality, method of production, geographical origin, or characteristics of those who produce them. A mark cannot be protected if it is confusingly similar to a mark owned by another party with earlier rights in the mark.

A related form of protection is **geographical indications or appellations of origin**, which identify a good as originating in the territory of a particular country, or a region or locality in that territory, where a given quality, reputation or other characteristic of the good is essentially attributable to its geographical origin.

Plant variety protection (also referred to as plant breeders' rights) gives the developer of a new variety of plant the exclusive right to produce, offer for sale, or market the propagating material of the variety. Plant varieties are generally protected if they are distinct, uniform, stable, have an appropriate denomination (name), and are commercially novel.

INTELLECTUAL PROPERTY DEFINITIONS (CONTINUED)

Integrated circuit layout-designs (or **topographies**) used in semiconductor chips are protected either under copyright or a *sui generis* law against copying the *mask* or template used to produce the semiconductor chip.

A **work of authorship** is the expression of an idea in an original way, that is, in a form that is original to the author and not copied or derived. **Copyright** protects against copying works of authorship, usually provided that the works are placed in a tangible form. Copyright protection extends to such acts as reproducing copies of a work, preparing derivative works, distributing copies, selling copies, or publicly performing, reciting, or displaying the work. The related area of **neighboring rights** (or **related rights**) protects the interests of performers, producers of phonograms (sound recordings) and broadcasting organizations with respect to live performances and the recording or broadcasting of those performances or recordings

Intangible property such as **business goodwill**, **trade secrets** or **undisclosed information**, **trade dress** or packaging, and **know-how** are protected under the laws prohibiting unfair competition. **Unfair competition** includes any act contrary to honest commercial practices**.** Acts of unfair competition include but are not limited to breach of contract, misappropriation of trade secrets, and false or misleading representations as to the origin or quality of goods or services. The laws against unfair competition are sometimes included in commercial (companies) law and are sometimes included in consumer protection law. **Restrictive business practices (monopolies**) related to licensing may also be acts of unfair competition.

A grant of **exclusive rights** allows an intellectual property owner to prevent others from exercising certain specified rights, such as the right to use or sell a patented product. It does not give the owner the legal authority to exercise those rights, which may be subject to government regulation or to the rights of other intellectual property owners.

Infringement is the unauthorized exercise of the exclusive rights of another party, for example, using a patented product without permission of the patent holder, or copying a work of authorship without the permission of the copyright holder.

Misappropriation refers to the taking of rights to which a party is not entitled, such as taking of another party's undisclosed information. Special terms are used in connection with infringement that involves close copying: **counterfeit** refers to infringement in which goods or packaging bear a mark that is identical to the mark of another party, or cannot be distinguished in its essential aspects, for the same goods or services; and **piracy** refers to infringement of works subject to copyright in which unauthorized copies are made directly or indirectly from an original or authorized copy of the work.

2 TRADE SECRETS AND UNDISCLOSED INFORMATION

The most basic way to protect any new development or valuable information is by keeping it a secret. A *trade secret* or *undisclosed information* is information that is legally protected against acquisition, disclosure or use, without the consent of the owner, in a manner contrary to honest commercial practices. The protection of undisclosed information is rooted in unfair-competition law, which prohibits deceptive or unfair practices between merchants or between a merchant and consumer. The underlying policy is to prohibit acts that are contrary to honest commercial practices.

SOME INVENTIONS SUCCESSFULLY MAINTAINED AS SECRETS FOR MANY YEARS

- Obstetrical forceps (most of a century)
- Formula for Coca-Cola® (more than a century)
- Egyptian mummification process (lost to science)

The ability to protect undisclosed information offers an important business advantage. Businesses devote considerable resources to identifying potential customers and maintaining customer satisfaction; improving and refining their products or methods of production to improve quality or reduce cost, or perhaps even developing new products or methods of production; and exploring business opportunities. Disclosure of such information allows others who have not made the same investment to receive the same benefit, to the relative competitive disadvantage of the one that developed it. Businesses therefore find it useful to keep such information secret in order to protect their investment and maintain the competitive advantage that it provides.

A trade secret or undisclosed information does not provide an exclusive right. It protects only against the unauthorized use, disclosure, or acquisition of the information, and only where such unauthorized use, disclosure, or acquisition takes place in a manner contrary to honest commercial practices. Any other person who independently discovers the same information, or who learns that information through legitimate means, is entitled to exploit that information without permission of the owner of the undisclosed information. If two or more people independently discover (or develop) information that is not generally known or accessible to

persons in the circles that would normally deal with the same kind of information, or if such persons obtain the information lawfully, each may have a trade secret right in the information.

The owner or proprietor of a trade secret or undisclosed information is any person who is lawfully in control of that information. Two or more persons may be proprietors of the same body of undisclosed information. Each proprietor may choose whether to keep the information secret, to disclose the information with an obligation of confidentiality on the part of the person receiving the information, or to disclose the information to others without an obligation of confidentiality.

WHAT TYPES OF INFORMATION CAN BE PROTECTED AS UNDISCLOSED INFORMATION?

- Scientific and technical information, including patentable or unpatentable inventions, technical or test data, or know-how
- Business and commercial information such as customer lists or sources of supply, business systems or methods, statistical information or models, or business opportunities

Provided in each case that each of the three TRIPS conditions for protection is met.

If the subject of undisclosed information is an invention, reliance on secrecy carries the risk that another person will independently make the same invention. However, a trade secret offers the advantage that it has an indefinite term; that is, the right exists so long as the information is not generally known within the circles of trade in which it is used. Trade secrecy is the main alternative to patent protection for inventions that do not meet statutory requirements for patentability. Unlike patents, trade secrets require no formalities, and there is no requirement of novelty, inventive step or non-obviousness, utility, patentable subject matter, or even inventorship or originality.

The proprietor of undisclosed information has a property right in the information and may convey it to others. Once information becomes generally known or available without a requirement of confidentiality, it loses its character as undisclosed information and the value it had because it was secret.

Because such a loss is irremediable (that is, it is not possible to make such information secret again), great care should be exercised in handling undisclosed information in order to prevent unauthorized disclosure. This obligation should be

exercised not only by the proprietor and by persons who are granted access to the information in the course of business, but also by lawyers and courts who may be called upon to decide matters related to undisclosed information. Unauthorized acquisition, disclosure or use of undisclosed information by unfair means is referred to as *misappropriation*.

TRIPS REQUIREMENTS FOR UNDISCLOSED INFORMATION

TRIPS Article 39 obligates WTO Members to protect *undisclosed information* by providing a legal means for legal or natural persons to prevent "information lawfully within their control from being disclosed to, acquired by, or used by others without their consent in a manner contrary to honest commercial practices," so long as the information

- is secret, as defined in Article 39,
- "has commercial value because it is secret," and
- "has been subject to reasonable steps, under the circumstances, by the person lawfully in control of the information, to keep it secret."

Under the TRIPS standard, virtually any type of information could be protected as a trade secret, subject to this three-prong test. Thus, in determining whether information can be protected as undisclosed information, the appropriate inquiry is not what types of information can be protected but whether these three conditions are met.

SECRECY

For purposes of TRIPS, *secret* means that the information, "as a body or in the precise configuration and assembly of its components," is not "generally known among or readily accessible to persons within the circles that normally deal with the kind of information in question." (TRIPS Article 39.2(a)) This does not require that each individual item of information be secret. It is sufficient that the body of information as a whole or in its particular details is not generally known or readily accessible by the relevant group of persons.

For example, a customer list may qualify as undisclosed information if that list is maintained in secrecy, even though the names of individual customers may be known or discoverable by other means, such as canvassing potential customers and inquiring as to whether they are customers of the enterprise that maintains the list. Similarly, under TRIPS, the Coca-Cola® formula would qualify as undisclosed information to be protected, even though it is possible to determine the constituent

parts with a great deal of accuracy through chemical analysis, and even though the ingredients may be listed on the container, because the manner in which the various elements are combined, and the precise chemical details of the resulting product, are not generally known or readily accessible by other drink manufacturers.

In both examples, the list or formula would be considered to be secret. If the information has also been the subject of reasonable steps to keep it secret and has commercial value because it is secret, the list or formula would be entitled to protection as undisclosed information.

COMMERCIAL VALUE BECAUSE OF SECRECY

TRIPS requires WTO Members to protect undisclosed information that has commercial value because it is secret. In most cases, information that meets the other two requirements will also have commercial value because it is secret. However, the mere fact that information is secret does not guarantee that it has commercial value. Since no standard is provided by which to make this determination, ordinary commercial principles should apply.

The principal commercial value of undisclosed information is usually the competitive advantage that it provides. Undisclosed business or technical information may contribute to the effectiveness or efficiency of an enterprise, promote quality, or otherwise contribute to the enterprise's profitability. The secrecy of such information enhances its value because it allows the enterprise that controls the undisclosed information to realize whatever advantages the undisclosed information confers, while the enterprise's competitors lack those advantages. If an enterprise's customer lists or technical know-how were available to any interested party, that information might offer the same practical benefits but would not confer the same competitive advantage.

Situations may arise where it is claimed that certain information should be protected as a trade secret or undisclosed information but there appears to be no commercial advantage to be gained from according such protection. Unlike patents, protection does not depend on industrial applicability or utility. However, it is difficult to imagine what commercial value would exist for a product with no known application, or a process for producing such a product, and more importantly for WTO Members, how keeping such information secret could give it commercial value.

Although the TRIPS Agreement does not require that information be protected unless it has commercial value because of its secrecy, TRIPS sets no minimum value as a requirement for protection. Consequently, there is no basis for requiring a high commercial value as a condition for protecting undisclosed information, and even undisclosed information of small commercial value is entitled to legal protection.

Even though there is no minimum value that determines whether undisclosed information is entitled to legal protection, the value of the undisclosed information may affect the legal remedies that are available. For example, on a claim of misappropriation of undisclosed information, the commercial value of the undisclosed information should affect the damages that a court would award. In some cases, it is possible that secret information could be of such minor importance that a plaintiff would not be able to establish the likely degree of harm required to warrant injunctive relief.

REASONABLE STEPS TO KEEP THE INFORMATION SECRET

Obviously, the best way to maintain the secrecy of information is to share it with no one. However, businesses need to share undisclosed information with employees or other persons from time to time. For example, employees may need to know certain technical details of a secret process or item of equipment in order to use the process or safely operate the equipment for the benefit of the business. As another example, a company may normally keep its customer list secret, but its sales, technical, or delivery personnel would necessarily have access to the list, or portions of it, in order to make sales calls, perform repairs, or ship products.

A prudent employer will inform employees in writing which items of information are considered confidential and the company's policy that such information is not to be disclosed except under specified conditions. A prudent employer will also require the employee's written agreement to abide by that policy as a condition of the employment contract.

A company may sometimes need to share its undisclosed information with persons who are not its employees. This may occur when the company contracts with attorneys, accountants, engineers or other technical staff, or even with cleaning staff, to perform work that will bring such persons into contact with the undisclosed information. An attorney may be asked to evaluate an invention for patentability or prepare a patent application for it. An accountant would have access to books that would disclose customers, sources of supply, financial data of

the company and possibly business plans or prospective business deals. Scientists, engineers, draftspersons, and technicians may be engaged to create technical drawings, conduct repairs, or make improvements on equipment or processes. It is good practice for the recipient of information to require the party furnishing the information to identify any information that is claimed to be confidential or from which its confidential information may be determined and to segregate it from non-confidential information. Some government agencies and some companies require such information to be marked, while others refuse to accept such information because they do not want to maintain it in their records. Instead, they may return unsolicited confidential information to the party furnishing it.

It is always prudent to protect valuable information. Where information is being shared with professionals who have an ethical and legal obligation to protect the confidences of their clients, it may be adequate to notify the professional that certain information is secret. This should be done both by notifying the individual that the material is considered secret and by taking such steps as adding a notice of confidentiality to any written materials or posting appropriate notices. In most other cases, persons who will have access to the information should be required to sign a nondisclosure agreement.

Of course, wherever possible, it is preferable to prevent inadvertent disclosures of confidential information by making arrangements to prevent such information from being available to, or observable by, other persons. Professionals, businesses, government agencies, and non-governmental organizations should institute policies and procedures to ensure that they do not make unauthorized disclosures of secret or confidential information, and that their employees and consultants either do not have access to confidential information or that they are obligated not to divulge or use such information, and understand that legal obligation.

A number of measures can and often should be taken to protect the secrecy of undisclosed information. Confidential documents should be stored in secure conditions, such as in a safe or locked file cabinet. Equipment and processes embodying confidential information should be located where they are not observable by the public, such as within an area surrounded by walls or fences, and access to those areas should be limited to persons with a legitimate reason for access. It may be reasonable to post guards around areas where sensitive information is stored or can be obtained. A notice should be attached to each confidential document to alert anyone who receives it that the information contained in the document is confidential. It is also prudent to maintain a log of

persons having access to confidential information and the precise information to which each person has access.

The standard for protection of undisclosed information against unauthorized acquisition, use, or disclosure is whether the measures taken to keep the information secret are reasonable in the circumstances. Thus, the extent to which measures should be implemented to protect confidential information depends on the nature of the information, its value, the expected efficacy of legal remedies, the perceived risk of disclosure, and other factual circumstances. So, for example, a small workshop with a secret new tool may find it reasonable in the circumstances to keep the tool in a drawer, while a factory with a secret production method may need more elaborate (and certainly stricter) safeguards.

Clearly, it is prudent to employ more safeguards to protect more valuable information, but it is not reasonable to expect a business to employ every conceivable safeguard in every case. Businesses need to weigh the cost of safeguards against the value of the information being protected and the perceived risk of misappropriation. This balancing should be considered in determining the reasonableness of the measures taken.

No single approach is suitable for all cases. Determining whether the measures that have been taken to protect the secrecy of information are reasonable under the circumstances must be done on a case-by-case basis, with particular reference to the facts. Legal advisers can help clients by suggesting creative and cost-effective ways to protect their undisclosed information.

One inexpensive step is to post notices in the workplace reminding employees of their obligations regarding information under their control. In some cases, undisclosed information might be compartmentalized, so that no single individual has access to the entire set of secret information. This may be useful when secret information contains a number of separate steps that do not need to be conducted together, as with an industrial process. In some cases, it may even be possible to conceal important elements of undisclosed information from most employees, for example, by labeling containers of ingredients in a non-misleading manner that does not disclose the actual contents (e.g., Container A, Box B). Of course, the protection of commercially valuable information should not be carried out in a way that poses a health or safety risk to employees who work with anonymously labeled containers.

MISAPPROPRIATION OF UNDISCLOSED INFORMATION

TRIPS Article 39 requires that legal or natural persons must be able to prevent undisclosed information lawfully within their control from being disclosed to, acquired by, or used by others without their consent in a manner contrary to honest commercial practices. Thus, misappropriation consists not only in unauthorized disclosure of undisclosed information but also its unauthorized acquisition or use. When the proprietor of the undisclosed information has taken reasonable steps to safeguard that information against disclosure, any person who knows, or has reason to know, that the information is secret should act in accordance with that knowledge.

Although it is legitimate to discover undisclosed information independently, it is not legitimate to discover it through dishonest means. TRIPS Article 39 specifies that the term "a manner contrary to honest commercial practices" must at least mean practices such as breach of contract, breach of confidence, and inducement to breach. The legal definition of misappropriation must also include the acquisition of undisclosed information by third parties who knew, or were grossly negligent in failing to know, that such practices were involved in the acquisition.

Thus, consistent with the TRIPS standard, a person who is contractually bound not to disclose undisclosed information would be liable for breach of that agreement by using it or disclosing it to others. Likewise, a person who obtained the information under a condition of confidence or trust would be liable for breach of that confidence. Any person with a fiduciary duty, such as a lawyer or member of a board of directors, would be liable for unauthorized disclosure or use on that theory. Inducement to breach could occur, *inter alia*, by offering something of value to a person who has access to undisclosed information under a contractual relationship, or under a relationship of trust, in exchange for disclosure.

While it is perhaps obvious that a claim of misappropriation could be made against a person who discloses secret information without authority and thereby breaches a contract or confidence, it may be less obvious that a third party who is not so bound could also be guilty of misappropriation. Since the unauthorized acquisition of undisclosed information also constitutes misappropriation, an offense would occur when a person with actual knowledge of a prior breach nevertheless accepts, uses, or discloses the information.

In many places, misappropriation carries criminal liability as well as potentially large civil liability. Thus, a person who is offered confidential information should not only refuse to accept the information but, in prudence, should take affirmative

steps to avoid being involved in the criminal scheme. An exemplary approach was demonstrated by executives of a large beverage company who were approached with an offer of confidential plans for a new product by the company's biggest competitor. The company that was approached prudently notified both the competitor whose secrets were being offered and law enforcement officials, who apprehended the individuals who had misappropriated the information.[34]

A person who is not party to a confidentiality agreement, and who has not been advised directly that information is confidential may also become liable for misappropriation by receiving the information under conditions that should have alerted him or her to the need to find out whether the information was legitimately obtained. The TRIPS standard in such cases is gross negligence, but the existence of such a requirement should alert businesses to the need for a reasonable investigation into the source of any proffered information.

The potential liability associated with an inadvertent disclosure of undisclosed information may call for individuals and businesses to develop policies on how to handle both undisclosed information belonging to others and information that is claimed to be confidential. Since such information is often submitted as part of a business proposal, the recipient of the proposal or other correspondence may be given such information without having had a chance to decide whether to accept it. For this reason, some companies and some government agencies adopt policies requiring information to be marked as confidential if the sender wishes to maintain it as secret and stating the circumstances under which they will accept or refuse such information. Documents or other items sent in violation of this policy are typically returned to the sender with an explanation of the policy.

HONEST AND DISHONEST MEANS

There is no definitive list of what constitutes honest or dishonest means. Two examples of honest means of acquiring information are independent discovery and reverse engineering. Inspection of an item that has been legitimately acquired, disassembling it or subjecting it to testing, are common elements of "reverse

---

[34] *See, United States v. Williams*, No. 06-00313-CR-3-1 (11th Cir. March 20, 2008); the full text of this opinion is available on the Eleventh Circuit website at http://www.ca11.uscourts.gov/published-opinions by searching for case number 06-00313. The case involved an attempt by an employee of the Coca-Cola Company to offer new product information to rival Pepsico.

engineering” and are considered legitimate means of learning secret information. It is also legitimate to learn or develop the information by independent means, such as experimentation or research.

Dishonest means include criminal activities such as breaking into a business. Dishonest means also include acts contrary to honest business practices or an ethical obligation, such as breach of contract or breach of some other obligation of confidentiality; inducement to breach of contract, such as luring away employees who have access to a competitor's trade secrets; and industrial espionage through wiretapping, eavesdropping, aerial photography of limited access areas, computer “hacking” or similar means, whether or not such acts are illegal in the place where they are performed.

Thus, the proprietor of a secret list of potential clients has no right to prevent a competitor from independently compiling a similar list but may prevent the competitor from obtaining a copy of the proprietor’s own list. A person who purchases an item made according to a secret formula is free to subject that item to chemical analysis to learn how to reproduce it but may not seek information from the employees of the company that produces the item for the same purpose. A person may use any information that can be obtained by ordinary observation—but attempts to circumvent a company’s security measures to learn the same information are contrary to honest business practices.

Some care should be used in deciding whether an obligation of confidentiality exists. An obligation not to acquire, use or disclose secret information may be created by a written agreement, implied from the circumstances, or created by action of law. An implied obligation occurs, for example, when the person providing information informs the recipient that the information is secret or conveys other information from which that conclusion can be inferred, even if the person does not at that point sign a confidentiality agreement. An example of an obligation created by action of law is a statutory provision prohibiting government employees from divulging certain types of information acquired in the course of their employment.

A particularly difficult issue arises when an employee who has had access to confidential information from his or her employer wants to accept employment with a competitor. Employees are generally free to leave their employment at any time and to accept other employment, but when an employee with access to the confidential information from one employer accepts a position where that

information could be used on behalf of a competitor, it may create problems both for the employee and the new employer.

In addition to the potential conflict over the use of the previous employer's undisclosed information, any invention made by the employee within a specified period of time may belong to, or be presumed to belong to the previous employer, or the employee may at a minimum be required to report the invention to the previous employer so a determination can be made as to ownership. Such situations can arise either by virtue of a provision in the employment contract creating such obligations or, in some places, because of provisions in the patent law.

Some employers approach this situation by building a "wall" around the employee to ensure that the employee does not provide any confidential information from the previous employer to the new employer, either intentionally or inadvertently. This "wall" is created by notifying both the transferring employee and that employee's new coworkers that the employee is not to work in the same subject area in which the employee worked with the previous employer, and that employees are not to discuss certain topics—the subject matter of the undisclosed information—with the transferring employee. These directions are generally made in writing. It is also helpful if the new employee can be assigned to work in an area that is geographically separate from the space where the new employer conducts work similar to that of the employee's previous employer. This approach helps to protect the new employer and the employee against allegations of misappropriation and provides a reasonable alternative to refusing to hire employees of the competitors.

SPECIAL PROVISIONS FOR TEST DATA

TRIPS Article 39.3 requires WTO Members to protect test or other data submitted to government offices as a condition of securing market approval for pharmaceutical or agricultural chemical products. Governments are required to protect such data against unfair commercial use and against disclosure except where the disclosure is necessary to protect the public and steps are taken to ensure that the data are protected against unfair commercial use.

The protection of test data represents a compromise among a number of competing policy concerns. Businesses have an interest in protecting valuable information against disclosure, and governments have an interest in learning about the product to protect public health and the environment. Consequently, pharmaceutical and agricultural chemicals are subject to more stringent regulatory requirements than

most industrial products. This is an important issue since the cost of testing is often on the order of ten times the cost of developing the new chemical product itself. The requirements of TRIPS Article 39.3 are discussed in greater detail below in chapters on Special Requirements for Pharmaceutical and Agricultural Chemical Products, and International Standards of Intellectual Property Protection.

3 INVENTIONS AND SIMILAR DEVELOPMENTS

An *invention* is a new development in any field of endeavor. An invention is typically a new device, process, composition of matter, or an improvement on any of these. Examples of inventions may include a new machine, a new chemical compound, or a new chemical process. Inventions may also include living matter, such as a new microorganism or variety of plant or animal.

People have been making inventions for millennia, as shown in the sidebar.[35]

SOME EARLY INVENTIONS

- Stone tools, Africa, 3,000,000 BC
- Textiles, Peru, 8000 BC
- Loom and woven cloth, worldwide; Turkey 7000 BC
- Papyrus, Egypt, about 3000 BC
- Ceramics, Japan, 8000–1000 BC
- Potter's wheel, first shown in Egyptian paintings, 2400 BC
- Olmec rubber products, Central America, about 1700 BC
- Aztec calendar wheels, 1000 BC
- Tumbler lock, Iraq, Egypt, Greece, 1000 BC
- Screw, Greece, about 550 BC

Note that these inventions were made in several locations around the world.

[35] *See* Mithen, Steven, "Invention of farming was first industrial revolution," http://www.independent.co.uk/opinion/commentators/invention-of-farming-was-first-industrial-revolution-703860.html, accessed July 26, 2014; Smith College, *Museum of Ancient Inventions*, http://www.smith.edu/hsc/museum/ancient_inventions/hsclist.htm, accessed July 26, 2014; Rostworowski, Maria, "Ceramics," *The Incas*, https://web.archive.org/web/20100126174452/http://incas.perucultural.org.pe/english/histec5.htm and https://web.archive.org/web/20110614230016/http://incas.perucultural.org.pe/english/histec8.htm, accessed July 26, 2014. "Peru has the longest continuous textile record in world history. Simple spun fibres almost 10,000 years old provide evidence of the first human occupation in western South America. Elaborate fabrics, dating from 3000 BC up to the present, survive in large numbers. "Ancient Peruvian Textiles," from Textile Collections, University of Cambridge Museum of Archaeology & Anthropology, http://museum.archanth.cam.ac.uk/textiles/collection/samerica/peru/, accessed July 27, 2014.

EGYPTIAN INVENTIONS

A number of important, early inventions are believed to have originated in Egypt, as there is early evidence of their use in Egypt. In addition to papyrus, mentioned above, the loom, potter's wheel and tumbler lock appeared in Egypt very early and may have been independently invented in Egypt and other places. For example, Egyptian paintings offer the first evidence of use of a potter's wheel and the earliest image of a loom is found on an Egyptian dish. Egypt is also credited by various authors as the birthplace of the water clock and solar calendar, the sundial, the ox-drawn plow, cosmetics, black ink, surgical tools shown in ancient drawings, toothpaste, and devices to facilitate irrigation.[36] It is, of course, difficult to establish the first inventor of many items since, even in ancient times, technology diffused across borders by trade and conquest.

Governments recognize a property interest in inventions and offer methods by which these interests may be protected. The principal means for protecting an invention is through a patent. However, an inventor may instead choose to retain the invention as a secret.

Although an invention is more than just an idea, the invention may exist in its complete form solely in the mind of the inventor. The inventor has no obligation to

---

[36] "The first evidence of the potter's wheel was found in Egyptian paintings"— "Potter's Wheel, Egypt, 2400 BCE." Smith College Museum of Ancient Inventions, http://www.smith.edu/hsc/museum /ancient_inventions/potterwheel2.html, accessed 27 July 2014. Note, however, that early evidence of the potter's wheel has also been found in other places. Likewise, "Many sources believe [the tumbler] lock was invented in Egypt, though locks of this type have been found in ruins in Iraq that predate those found in Egypt"— Museum of Ancient Inventions, http://www.smith.edu/hsc/museum/ancient_inventions/hsc09b.htm.

"The oldest known depiction of a loom comes from an Egyptian dish dated 4400 BCE"— Museum of International Folk Art, "Weaving," http://www.internationalfolkart.org/eventsedu/education/needlesandpins/weaving.html, accessed July 27, 2014. For a discussion of weaving, see the Petrie Museum's "Textile production and clothing, Technology and tools in ancient Egypt," http://www.digitalegypt.ucl.ac.uk/textil/tools.html, accessed 27 July 2014; also see "Weavers, Tomb of Khnumhotep," and "Fragmentary Model of a Weavers Shop" in collections at the Metropolitan Museum of Art, http://www.metmuseum.org/collection/the-collection-online/search/548575 and http://www.metmuseum.org/collection/the-collection-online/search/573649, both accessed July 27, 2014. A number of sources attribute such inventions as cosmetics, the ox-drawn plow, and the water clock to Egypt. For a good set of images, *see* "Ancient Egyptian Inventions," http://www.buzzle.com/articles/ancient-egyptian-inventions.html, accessed July 27, 2014. For images of irrigation devices, see Postel, Sandra, "Egypt's Nile Valley Basin Irrigation," excerpted from *Pillar of Sand*, http://www.waterhistory.org/histories/nile/, accessed July 10, 2014.

share his or her invention with the public. An inventor is free to disclose or exploit the invention, or to refrain from doing so. So long as the invention is not realized in a tangible form or communicated to others, there is no practical way for others to obtain disclosure of an invention except through cooperation of the inventor. Consequently, governments offer legal protection for inventions in order to encourage inventors to disclose and develop their inventions and thus enable the public to share in their benefits. In some cases, it may be possible to exploit an invention without disclosing it in a way that would allow it to be copied successfully by others.

In other cases, normal exploitation of an invention discloses its essential features to the public. These features may be obvious from inspection, or some experimentation may be required. Inspection and experimentation to determine how an invention works are legitimate means of learning how a product is made or operates. Any person who learns about the invention in this way is free to copy it unless the invention is protected by a patent or other form of protection that offers exclusive rights.

CHOOSING A METHOD OF PROTECTION: PATENTS *VS.* TRADE SECRETS

The two basic means for protecting an invention, maintaining it as a trade secret or applying for a patent, each offer some advantages and disadvantages to the owner.

A trade secret offers the advantage that it can be maintained indefinitely, provided the subject matter remains undisclosed or undiscovered by legitimate means. A patent, by contrast, has a limited term, generally 20 years from the date of filing, after which time anyone may copy the invention without the permission of the inventor.

A trade secret also has the advantage that it can be maintained for inventions that do not meet the requirements of patentability. That is, a trade secret can be maintained even where the proprietor is not the inventor, and even when the invention is not new or does not contain an inventive step.

The chief advantage of a patent lies in the exclusivity it offers, that is, the protection that a patent offers against copying by those who discover how to make or use the invention and even against those who subsequently make the same invention independently. The patent owner is free to exploit the invention without a need to assure that its details cannot be learned and appropriated by others. Trade secrets do not offer this protection. Unlike the proprietor of trade secrets, a patent

owner does not need to take steps to keep the invention a secret to avoid losing rights through inadvertent disclosure.

An inventor may prefer to maintain an invention as a trade secret. However, it is more beneficial to the public[37] when an invention is disclosed in a patent, for at least two important reasons. First, a patent must describe how to make and exploit the invention. The public can build on this knowledge to improve the invention or to "invent around" it, that is, to find additional ways of accomplishing the benefits of the patented invention. Second, unlike a trade secret, which can potentially last forever, the patent term is limited. When the patent term expires, the public is free to use the patented invention without permission from the patent holder.

HOW DOES THE PUBLIC BENEFIT FROM THE PATENT SYSTEM?

Consider the obstetrical forceps, a device developed and maintained as a trade secret during the 17th century by a family of physicians named Chamberlen. The Chamberlens were known for being able to handle difficult births. Their secret was passed from one generation to the next within the family. The Chamberlens prevented others from learning of their secret device by ensuring that it could not be observed and through misdirection (e.g., by carrying the forceps in a large box). It is not known exactly when the Chamberlens invented (or perhaps rediscovered) the forceps, but they were able to keep the secret within their family for almost a century. See, Lyons, Albert S., and Petrucelli, R. Joseph II, Medicine 456, 481 (New York, 1978).

If the invention had been protected by a patent instead of being kept as a trade secret, the Chamberlens might have sold or licensed the forceps to others, allowing other physicians to use the new technology to reduce maternal and neonatal mortality many years sooner. Which would have been better for the public?

[37] As illustrated by the experience of the obstetrical forceps. For other good accounts of the history of this secret device, *see* Dunn, Peter M., "The Chamberlen family (1560–1728) and obstetric forceps," *Arch Dis Child Fetal Neonatal Ed* 1999; **81**:F232–F235, http://www.pubmedcentral.nih.gov/picrender.fcgi?artid=1721004&blobtype=pdf, accessed March 12, 2009; Aveling, James Hobson, *The Chamberlens and the Midwifery Forceps*, (London 1992), available online through Google Books.

WHAT CONSTITUTES MAKING AN INVENTION?

An invention is made when the inventive idea, with all its essential attributes present, is so clearly defined in the mind of the inventor that it is capable of being converted into reality and put into practice by the inventor or by one who has ordinary skill in the relevant area of technology.[38]

The method by which an invention is made is not legally significant. An invention may be made as a result of a sudden inspiration or after painstaking experimentation. An invention may even be discovered by accident, provided that the inventor recognizes the invention. If the inventor fails to recognize an invention, the requisite conception has not occurred.

A related question is whether a *discovery* can be a patentable invention. The answer depends in part on what is meant by the term "discovery." The term "discovery" is often used to describe the act of finding of something that already exists. Thus, we might say that "Columbus discovered America," meaning that the explorer found a part of the world that was already in existence, but we would never think that this type of discovery constituted an invention.

In the same way, a scientist may discover a new strain of microorganism that grows in a certain environment. This is a discovery of something that already exists in nature. It is therefore not an invention, because the scientist did not invent the strain of bacteria. For that reason, and also because it is not new, the discovery—the microorganism—would not be a patentable invention. Similarly, we may refer to the "discovery" of a scientific fact, such as the boiling point of a chemical compound or stickiness of an adhesive. As another example, a scientist may analyze data and discover a pattern that can be described by a mathematical model or formula. This is a discovery of a scientific principle, but the mathematical model or formula that describes the behavior of the data is likewise not an invention. In both situations, the discovery—the boiling point or degree of stickiness, or the scientific principle or law of nature—would not, by itself, be a patentable invention, although a practical application that made use of the property or principle could be a patentable invention.

Even though a discovery by itself (sometimes referred to as a *mere discovery*) may not be patentable, discovery (in the sense of observation and recognition) is

---

[38] 1 *Lipscomb's Walker on Patents 3d* 217 (1984), *citing Technitrol, Inc. v. United States*, 194 Ct Cl 596, 440 F2d 1362, 169 USPQ 732 (1971).

frequently part of the process of making a patentable invention. The situations described above should therefore be distinguished from the type of "discovery" that merely refers to the recognition of all or part of a technical solution, or that characterizes the culmination of a series of experiments.

For example, Bakelite®, one of the earliest plastics, was invented when Leo Hendrik Baekeland set out to develop a substitute for shellac. Baekeland conducted a series of experiments, one of which instead yielded a different product, Bakelite®, the first thermoset plastic (a moldable plastic that would hold its shape at high temperatures).[39] Baekeland "discovered" this new material by conducting tests to determine its properties. Based on those tests, he recognized that its properties constituted a solution to a technical problem. This type of "discovery"—the recognition that a solution to a technical problem has been achieved—occurs in the making of any invention and should not be a ground on which to refuse a patent.

This issue is important because it has implications for patentability. The patent laws of some countries specifically provide that a discovery is not an invention. Other countries' patent laws exclude discoveries from patentability.[40] Still other countries take the issue of discovery into account in applying the criteria for patentability.[41]

---

[39] See, *e.g.*, "Leo Hendrik Baekeland, an episode in the Public Broadcasting Service series *Who Made America?* PBS, http://www.pbs.org/wgbh/theymadeamerica/whomade/baekeland_hi.html.

[40] The fact an invention is a "discovery" is not one of the grounds that the TRIPS Agreement recognizes for denying a patent. Examiners and practitioners in WTO Members where the patent law creates this exclusion should therefore take care to apply it in a manner that does not exceed the grounds for exclusion recognized under the TRIPS Agreement.

[41] A related issue concerns the patentability of naturally occurring material that has been isolated. Whether such materials are patentable inventions depends on the law of the jurisdiction where a patent application is filed.

In the United States, the Supreme Court rejected the argument that the process of isolating a strand of DNA constituted a change sufficient to justify granting a patent for the DNA isolate. In *Association for Molecular Pathology et al. v. Myriad Genetics, Inc*., et al., 569 U. S. ____ (2013), the Supreme Court held that "A naturally occurring DNA segment is a product of nature and not patent eligible merely because it has been isolated, but cDNA is patent eligible because it is not naturally occurring." The term cDNA refers to "complementary DNA," that is, DNA that has been synthesized by use of the DNA.

Australia's court reached a different conclusion. In *Contrast Cancer Voices Australia v Myriad Genetics Inc. [2013] FCA 65 (15 February 2013)*, the Federal Court of Australia found that claims to

Despite these differences in national practice, there is a common theme: a person may *discover* an invention, but there is no patentable invention where a discovery relates only to the finding or recognition of something that is already in existence. Even in countries that do not contain such a provision in their patent laws, the examination for novelty would lead to a refusal to grant a patent, based on lack of novelty.

DETERMINING WHETHER AN INVENTION HAS BEEN MADE

Even though making an invention is primarily a mental act, merely having an idea for a new product is *not* making an invention. An abstract idea, apart from the means for carrying it into effect, is not an invention.[42] The making of an invention requires a complete conception of all the essential elements necessary to carry out the invention. *Compare*, for example, the *idea* of a medicine to prevent poliomyelitis, with the *invention* of a vaccine to prevent poliomyelitis; the *idea* of using water to generate electricity, with the invention of a hydroelectric dam and turbine system; the idea of using electricity to create light with the invention of the electric light bulb.

Many people are able to recognize a problem and conceive of an avenue for exploring a possible solution, but not every person is able to conceive of the means for carrying out the invention. If an invention has been made, the inventor should be able to describe all the essential elements of that invention—each essential element and how each element operates with regard to each other element, as well as any limitations on the operation of the invention. If the inventor cannot identify the essential elements and how they relate, it remains merely an idea for an invention or perhaps a promising area for future research and development.

---

composition comprising naturally occurring DNA and RNA that has been isolated constitute claims for a manner of manufacture for purposes of §18(1)(a) of Australia's Patents Act 1990 and that a valid patent may therefore be granted for a claim that covers naturally occurring nucleic acid—either deoxyribonucleic acid (DNA) or ribonucleic acid (RNA)— that has been "isolated."

In some places, this issue has been resolved by legislation. For example, the European Union's Directive on the Legal Protection of Biotechnological Inventions provides at Article 3.2 that "Biological material which is isolated from its natural environment or produced by means of a technical process may be the subject of an invention even if it previously occurred in nature."

[42] *Id*. at 169. Also, a U.S. court has stated, "Conception is complete only when the idea is so clearly defined in the inventor's mind that only ordinary skill would be necessary to reduce the invention to practice, without extensive research or experimentation." *Burroughs Wellcome Co. v. Barr Laboratories, Inc*., 40 F.3d 1223, 1228 (Fed.Cir. 1994).

Being able to determine whether an invention has been made is important for several reasons. A primary reason is to determine whether an invention exists for purposes of filing a patent application. Obviously, if the subject matter of the application is not an invention, it cannot be a patentable invention.[43] It is important to know whether an invention has been made in order to establish the identity of the inventor or inventors, and in some countries, to know when the invention was made in order to determine whether the invention satisfies the patentability requirement of being novel.

Although it is not necessary to *reduce an invention to practice* in order to complete it, reduction to practice demonstrates conclusively that an invention has been made. *Reduction to practice* occurs when an invention with all its elements is embodied in a tangible form and operates for its intended purpose. A process is reduced to practice when it is successfully performed. A machine is reduced to practice when it is assembled, adjusted and used. An article of manufacture is reduced to practice when it is successfully manufactured. A composition of matter is reduced to practice when it is successfully composed.[44] For a very simple invention, it may be sufficient simply to construct the invention to demonstrate that the invention is workable,[45] while some types of inventions may require extensive testing to demonstrate that they perform in a specified manner.

Alternatively, it may be demonstrated that an invention has been made if the invention is fully described, with all its essential elements, in a manner that would enable a person of ordinary skill in the relevant field of technology to make and use the invention. Drawings and descriptions are not sufficient to accomplish a reduction to practice. However, filing a patent application with an enabling description of the invention is considered to be a constructive reduction to practice. In the U.S. Patent and Trademark Office, a constructive reduction to practice is considered to have occurred as a result of filing a patent application, but only if that application provides sufficient disclosure on how to use and how to make the

---

[43] When more than one person applies for a patent on the same invention (not an uncommon occurrence), the previous practice in some countries, notably the United States, was to award the patent to the applicant who first made the invention, not necessarily the one who first applied for a patent.

[44] *Id*. at 232, *citing Corona Cord Tire Co. v. Dovan Chemical Corp*., 276 US 358, 72 L.Ed. 610, 48 S Ct 380 (1928).

[45] *See, e.g., King Instrument Corp. v. Otari Corp*., 767 F.2d 853, 860, 226 USPQ 402, 407 (Fed. Cir. 1985).

invention to meet the disclosure requirement of US patent law,[46] and if the utility (or industrial applicability) of the invention is not obvious, the specification must disclose a practical utility. Establishing utility is particularly important with chemical compounds, where small differences in chemical structure may give results sufficiently different from previously known technology that the same function cannot be presumed to exist.

DETERMINING INVENTORSHIP

An *inventor* is a person who conceives of a completed invention. If two or more persons jointly contribute to making an invention, they are co-inventors or joint inventors. Whether a person is an inventor (or co-inventor) is a legal determination based on a factual inquiry. The first step in determining whether a person is a joint inventor is to identify what that person contributed to making the invention and whether that contribution is of an inventive nature.

Joint inventors need not have worked directly with each other so long as each contributed to the subject matter of the invention and there was some cooperation among them.

Inventorship is determined on the basis of contribution to the intellectual concept that constitutes the invention. A person does not become an inventor by virtue of position, for example, as head of a laboratory or department in a research institute, or by being supervisor or faculty adviser to an inventor, or by virtue of having made a monetary contribution to the research or having paid for the development of the invention. This is true even where such person is entitled to own the patent for the invention.[47]

Inventorship has legal implications, and it is highly inappropriate to list a person as an inventor as a courtesy or honor when that person has not contributed directly to making the invention. Similarly, a person who assists the inventor does not become a joint inventor, even if the assistance is of a technical nature, if that person is merely carrying out the inventor's instructions. However, a person who is

---

[46] "Reduction to Practice," MPEP 2138.05, citing 35 U.S.C. 112, first paragraph, and *Kawai v. Metlesics*, 480 F.2d 880, 886, 178 USPQ 158, 163 (CCPA 1973).

[47] Note that the right to be named as inventor is personal to the individual(s) who made the invention and is non-transferrable, while rights to patent ownership are freely transferrable.

engaged to determine one or more essential features of an invention may become an inventor.

An inventor often requires assistance in carrying out the invention. This assistance may come from a number of sources. For example, the inventor may need the assistance of draftspersons to make detailed drawings to assist in building the invention, or machinists or others to help build the invention. If such persons merely carry out the instructions of the inventor, their contribution is not of an inventive nature, and they are not considered co-inventors by virtue of that contribution. This is true even if their contribution includes technical matters that are within the ordinary level of skill in that field of technology. Sometimes, however, such persons make suggestions that are incorporated in the invention and are part of its essential elements. In those cases, they are co-inventors, regardless of whether they were employed for their technical skills.

Inventors may obtain factual information from a variety of sources. They may, for example, consult reference works. Instead of consulting a reference work, an inventor may obtain the same information from a person with a high degree of technical knowledge—a scientist or engineer, for example. Providing such information does not make the person who was consulted a joint inventor.

On the other hand, a person may obtain the assistance of such a knowledgeable person to determine how to bring about an effect. In this case, the knowledgeable person is an inventor.

In these cases, a final issue is whether the person who sought assistance is also an inventor. The answer turns on whether each person made an inventive contribution to the essential features of the invention.[48]

In some cases, making an invention requires a degree of experimentation or testing to determine one or more of its essential features. In this situation, a team of

---

[48] It can be difficult to sort out the legal effect of contributions by different individuals. For an explanation of U.S. practice, *see*, "Inventorship," MPEP 2137.01: "'In arriving at … conception [the inventor] may consider and adopt ideas and materials derived from many sources ... [such as] a suggestion from an employee, or hired consultant … so long as he maintains intellectual domination of the work of making the invention down to the successful testing, selecting or rejecting as he goes … even if such suggestion [or material] proves to be the key that unlocks his problem' *Morse v. Porter*, 155 USPQ 280, 283 (Bd. Pat. Inter. 1965). See also *New England Braiding Co. v. A.W. Chesterton Co.*, 970 F.2d 878, 883, 23 USPQ2d 1622, 1626 (Fed. Cir. 1992) (Adoption of the ideas and materials from another can become a derivation.)."

persons may be engaged to carry out part of that testing and experimentation. Is the inventor the person who commissioned the experimental work or the persons who carried it out, or both? The answer depends on who made contributions to the essential features of the invention. If the person who commissioned the work requested knowledgeable people to find a solution to a problem, that person may well *own the invention* but *not* be an *inventor*.[49] If the person who commissioned the work also directed the work and designed the experiments, which were carried out in order to report back specified facts, then the person who commissioned the work is the inventor and the scientists and technicians who carried out the experiments are not co-inventors. If the work was done collaboratively, with contributions to the essential features of the invention both from the one who commissioned the work and those who participated in laboratory trials or development, then all may be co-inventors.

Whether a feature is an *essential* feature of the invention depends on the facts. If a feature is required for the invention to operate as intended, it is an essential feature. If it is a mere technical correction that would be known by a person of ordinary skill in the relevant field of technology, it is probably not an essential feature.

In deciding whether a person may be a co-inventor, it is useful to consider what contribution that person made and whether the invention could be described adequately if the feature in question were omitted. If omitting that contribution would make the invention incomplete or inoperable, the contribution is essential. If the contribution is essential to operability but the invention can be understood without mentioning the contribution because a person of ordinary skill would know to take the step in question, then the contribution is probably not an essential feature of the invention but rather part of the state of the art, and it is most likely that the person in question was not a co-inventor.

If two or more persons have each contributed to making the invention but there has been no cooperation among them, they may be independent inventors, that is, one person, or a group of persons, may have made the invention independently of the other person or group of persons.

---

[49] In many countries, the patent laws make special provision for ownership of patents for inventions made by employees or by individuals engaged to make an invention. Most often, these laws provide for the employer or party commissioning the work to be the owner of the invention. However, ownership does not make such persons inventors.

It is relatively common for two or more persons, working independently of each other, to make the same invention. One inventor (i.e., a single inventor or group of joint inventors) may be entitled to obtain a patent while the other is not.

A person who makes an invention is an inventor, even if the invention has been made before by another person. The fact that someone else has already made a particular invention does not diminish a subsequent inventor's creative contribution or right to be known as a true inventor. Neither does the fact that the invention may not be patentable, or may not be patentable to that person.

However, a person is *not* an inventor if that person copied or derived the invention from someone else, even if the copying were done with the permission of the true inventor, with or without remuneration. In such cases, the person *may* be entitled to apply for a patent if there is a legal basis for such claim, such as an employment contract or assignment, but such a person is *not* entitled to be named as the inventor. The right to be named as an inventor[50] in a patent is belongs exclusively to the person or persons who actually contributed to making the invention as described above. A person is likewise *not* an inventor who copies an invention even if some experimentation is required to duplicate what has been previously observed.

STATUTORY MEANS OF PROTECTION OF INVENTIONS

Inventions may be protected in a number of different ways, depending on their subject matter and statutory requirements. Each of these forms of protection is subject to different conditions for obtaining protection, and each provides a different set of rights. Some of these forms of protection, and the conditions under which they are applicable, are described in subsequent chapters.

[50] "The inventor shall have the right to be mentioned as such in the patent." Paris Convention, Article 4*ter*.

4 PATENTS

A *patent* is a government grant of exclusive rights in an invention for a limited period of time, in exchange for which the inventor must disclose the invention to the public. At the end of the patent term, any person is free to use the invention. The disclosure required by the patent system enables the public to learn how to exploit the invention, which can be done freely after the end of the patent term.

A patent can only be obtained by or through a person who is the true inventor of the invention described and claimed in the patent application. That is, a person cannot apply for a patent on an invention that the person named in the application did not actually invent.[51] Therefore, a person who derives or copies an invention from another person is not entitled to obtain a patent on the invention even if he or she is the first to file a patent application. The inventor is entitled to be mentioned as such in the patent application.[52] When preparing a patent application, care should be taken not to name as an inventor a person who did not actually contribute to the making of the invention. Persons who made other types of contributions may properly be named as, for example, an assignee or source of funding. In other types of documents, such as a company report or a scholarly article, the contributions of non-inventors may be referenced in some other way, for example, through an acknowledgment,[53] but such persons should not be named as inventors. In some countries, wrongly naming inventors jeopardizes the validity of the patent.

---

[51] A patent application must name the true inventor. Some countries require that the application for a patent be brought in the name of the true inventor, even if another party owns rights to the invention. Other countries allow the patent application to be filed in the name of the owner, even if the owner is not the inventor, provided that the application names the true inventor and the owner claims rights on the basis of some legal relationship with that person.

[52] *See* note 50 above.

[53] The ability to acknowledge contributions such as sponsorship, funding, or editing is more limited in a patent than in a scholarly article.

Although a patent can only be obtained in the name of a person who is a true inventor, the fact that a person is a true inventor may not entitle that person to obtain a patent. To obtain a patent, the person must also satisfy other grounds of patentability. For example, a person who is a true inventor may not be the inventor who is first to apply for a patent on the invention, or an earlier inventor may have committed some other act that made the invention unpatentable, such as using it publicly or describing it in a scientific journal, or the inventor may file an application that does not satisfy legal requirements of the office where the application is filed.

If, however, the inventor obtains a patent, the patent will provide a set of legal rights that allow the inventor an opportunity to recover his or her investment in the invention, make a profit, and establish a market position during the patent term. The inventor is not guaranteed a particular reward. The benefit the inventor will derive from a patent may depend on such factors as public demand, marketing skill, the advantages of the patented invention over other technology, or the cost of the invention or of retooling to make use of the invention, as well as other factors.

The international norm is to provide a patent term of at least twenty years from the date of filing a patent application. This distinguishes a patent from a monopoly, which can be maintained for an indefinite term. Unlike a monopoly, a patent may only be granted for a *new* invention. Patent rights therefore take away nothing that the public has ever had before, and consumers remain able to use all products that have previously been available to them.

The principle advantage of a patent over a trade secret is that a patent offers a legal means for an inventor to prevent others from exploiting the invention, even if those others have independently made the invention. Examples of patented inventions include the telephone, light bulb, cotton gin, the process of xerography, folding strollers for babies, a strain of bacteria that eat petroleum, a test for human immunodeficiency virus, and the space shuttle.

PATENTABLE SUBJECT MATTER

Any field of technology may provide patentable subject matter for an invention. TRIPS Article 27.1 prohibits discrimination in issuing patents based on the place in which the invention is made, the field of technology to which it relates, or "whether products are imported or locally produced." For WTO Members, limited exclusions from patentability are permitted only as described below.

EXCLUSIONS FROM PATENTABILITY

A WTO Member is permitted to have in its patent law limited exclusions from patentability where the exclusions are necessary to protect *ordre public* or morality, including to protect human, animal or plant life or health or to avoid serious prejudice to the environment. *Ordre public* is a French legal concept that refers to compelling issues of public policy necessary for a well-ordered society. The concept is not limited to particular subjects but should be understood as referring to principles of such importance that the government cannot depart from them. However, Paris Convention Article 4*quater* prohibits countries from refusing to grant a patent or invalidating a patent because the sale of the patent product or a product of a patented process is restricted under the country's law.[54] This obligation is binding both on Paris Convention countries and also on WTO Members.

WTO Members are also permitted but not required to exclude certain types of inventions from patentability. Such exclusions are permitted for "diagnostic, therapeutic and surgical methods for the treatment of humans or animals"; and "plants and animals other than micro-organisms, and essentially biological processes for the production of plants or animals other than non-biological and microbiological processes." (TRIPS Article 27.3) However, under TRIPS Article 27, WTO Members must protect "plant varieties either by patents or by an effective *sui generis* system" or by a combination of such systems.

Note that nations are not *required* to incorporate these exclusions into their patent laws, and some countries prefer to maintain patentability in order to encourage development of inventions in these areas. For example, a nation with a strong agricultural sector may choose to offer both the benefits of the patent system and those of a *sui generis* system of plant variety protection, to the extent that the forms of protection do not overlap. Likewise, a country may choose not to incorporate the exclusions in the areas of technology mentioned in TRIPS Article 27.3 if the country has or wishes to develop those types of inventions or to build a strong economic base in those sectors.

For WTO Members, any exceptions to the exclusive rights conferred by a patent, other than those specifically provided, must comply with the further requirements

---

[54] Paris Convention Article 4*quater*: "The grant of a patent shall not be refused and a patent shall not be invalidated on the ground that the sale of the patented product or of a product obtained by means of a patented process is subject to restrictions or limitations resulting from the domestic law."

that the exceptions be limited, that they do not unreasonably conflict with a normal exploitation of the patent, and that they do not unreasonably prejudice the legitimate interests of the patent owner, taking account of the legitimate interests of third parties.[55]

REQUIREMENTS FOR PATENTABILITY

Although a patent is the usual means for protecting an invention, and any invention may potentially be patentable subject matter, not all inventions are patentable. The conditions for patentability are determined by national law, but subject to international norms. Under TRIPS Article 27.1, patents must be available for any inventions, whether products or processes, in *all* fields of technology, provided that the invention

- Is new;
- Involves an inventive step (or is nonobvious); and
- Is industrially applicable (or useful).

These three requirements—*novelty* (the invention is *new*), *utility* (the invention is *useful* or *industrially applicable*), and *nonobviousness* or *inventive step*—are near-universal substantive requirements for patentability.

Novelty is determined on the basis of what is previously known, also referred to as the *prior art*, as defined in a country's domestic law. An invention has an *inventive step* if it is not merely an obvious improvement over previously known inventions. An invention is *useful* or *industrially applicable* if it has a use or is capable of industrial application.

PERSON SKILLED IN THE ART

A number of conditions of patentability are applied with reference to a person who is "skilled in the art." The phrase "skilled in the art" is a legal term of art that refers to a hypothetical person who possesses the ordinary level of skill of a person who works in the relevant area of technology but who is familiar with all information in that area of technology. This approach is adopted to introduce some objectivity into the evaluation of patents and patent applications. Evaluations of novelty and inventive step should always be made with regard to the point of view

[55] TRIPS Article 30.

of this hypothetical person, and it is never appropriate to make such evaluations on the basis of the examiner's own knowledge or point of view.

For an invention concerning bricklaying, the person skilled in the art may be a brick mason. If the invention concerned a new material that could be substituted for bricks or mortar, the person skilled in the art might be a materials scientist. If the invention concerned a new way of assembling the bricks and mortar, the person skilled in the art might be an architect, builder, or civil engineer. If the invention concerned a new recipe to be used in microwave ovens, the person of ordinary skill in the art would be a person who is familiar with microwave cooking; when the microwave oven was so new that there were essentially no persons with such experience, the person of ordinary skill in the art might be a person who is familiar with cooking, such as a chef or home economist.

Note that the applicable level of skill is not necessarily that of an expert or a person with exceptional talent or genius. Rather, it is the level of skill possessed by an ordinary person who is, however, fully conversant with the field. This person of ordinary skill is not the same as a real person since, as a legal matter, it is assumed that the hypothetical person skilled in the art has actual knowledge of every patent or publication that describes relevant technology, a standard that clearly does not prevail in the real world. The skill level is thus interpreted not in terms of knowledge, which is imputed to the inventor, but in terms of judgment, that is, whether the *person skilled in the art* would find it obvious to build on the prior art in a particular way. Although the person having ordinary skill in the art is a hypothetical person, that person's level of skill may be determined through the statements of real persons having knowledge of the particular field of technology.

ACQUIRING PATENT RIGHTS

Patent rights are acquired by filing a patent application with the patent office (that is, the governmental office that deals with patents) in any country where patent protection is desired.[56] Both the invention and the application must satisfy the legal requirements for patentability as set forth in the law that applies in that office.

Filing requirements are specified by national law. Although the requirements for patentability vary from one country to another, there are substantial similarities in patent requirements of countries around the world. Filing requirements typically

[56] In some cases, this may be a regional office.

include two types of information: bibliographic information, such as the name, address, and nationality of the applicant, and technical information concerning the invention.

An applicant ordinarily must provide a technical description of the invention and claim the subject matter the applicant believes is entitled to the protection of a patent. The vast majority of countries require that the patent application disclose the invention in a manner sufficiently clear and complete that the invention can be carried out by a person skilled in the art. This is sometimes referred to as the requirement for an *enabling disclosure*.

The applicable patent law may also require the applicant to indicate the best mode for carrying out the invention known to the inventor at the filing date or, where priority is claimed, at the priority date of the application.[57] (Priority refers to the ability to claim an earlier filing date based on the filing of another application; priority is discussed in detail below.) If the patent law contains a best mode requirement, the application must also satisfy that requirement.

Once the application is filed, it may be examined to determine whether the invention meets the substantive requirements of novelty, inventive step, and industrial applicability. This is determined by comparing the claimed invention with the *prior art*, that is, the body of knowledge that is legally significant for purposes of determining whether the invention is new or has an inventive step. In countries that examine patent applications, the patent office will perform a search, compare the invention as described in the application with what is known in the prior art, and inform the applicant of any reasons that it may not be appropriate to issue a patent. The applicant then has an opportunity to provide a response that addresses those reasons.

DESCRIPTION

A patent application must describe the invention in such full, complete and clear terms as will enable a person of ordinary skill in the relevant technology to carry

[57] TRIPS Article 29.1 provides that WTO Members "shall require that an applicant for a patent disclose the invention in a manner sufficiently clear and complete for the invention to be carried out by a person skilled in the art and may require the applicant to indicate the best mode for carrying out the invention known to the inventor at the filing date or, where priority is claimed, at the priority date of the application."

out the invention. This description must be made at the time the application is filed.

The precise elements to be included in a description, and the form in which they are to be submitted, vary from one country to another, and the description must be prepared according to requirements determined by the law under which the application is filed.[58] There is, however, substantial agreement as to the elements to be included in the application. The required disclosure ordinarily includes a technical description of the invention, also referred to as the *specification*, and drawings if applicable. In addition, the application must include a summary of the application and a more technical abstract of the invention and claims that define the subject matter to which the patent application applies. Some countries treat the abstract and claims as part of the description of the invention, while others do not.

The specification typically includes a discussion of the technical field of the invention; a review of the relevant prior art as it relates to the object of the invention; the object of the invention, or problem to be solved; a brief description of any drawings; a statement of how the invention is industrially applicable; a technical description of the invention as claimed; and a detailed account of at least one way of carrying out the invention as claimed.

A statement of the technical field of the invention can be very succinct. The following examples are taken from patents issued to Egyptian inventors:

- This invention relates to a water heating system or apparatus and more particularly to a solar water heating apparatus wherein water acts as a heat transferring medium. El-Shayeb, *Integral solar water heaters*, U.S. Patent 4,452,231.
- The present invention relates to a racquet for playing a ball game. Lotfy, *Racquet for playing a ball game*, U.S. Patent 4,549,736.
- The present invention concerns a modular construction system for the erection of buildings in which hollow-core construction blocks are superposed upon one another without intervening mortar and are intended

[58] *See, e.g., Guide for Applicants*, European Patent Office, http://www.epo.org/applying/european/Guide-for-applicants/html/e/index.html; *A Guide to Filing a Non-Provisional (Utility) Patent Application*, United States Patent and Trademark Office, http://www.uspto.gov/web/offices/pac/utility/utility.htm; Frequently Asked Questions, Japanese Patent Office, http://www.jpo.go.jp/cgi/linke.cgi?url=/tetuzuki_e/faqs.htm.

to be filled with concrete. Hegazi, *Modular construction system for the erection of buildings*, U.S. Patent 4,590,729.

- This invention relates to a method and apparatus for applying cryotherapy and more particularly to apparatus and methods employing specifically shaped elongated tubular needles inserted through the skin of a patient to destroy lesions by passing a cryogen through the needle. Weshahy, *Methods and apparatus of applying intra-lesional cryotherapy*, U.S. Patent 4,802,475.
- This invention relates to compositions and methods for improving the nutritive value of cereal based breads, to novel microbes useful in the fermentation of breads which thereby provide improvements in the bread's nutritive value, to grain and microbe mixtures, and to yeast and microbe mixtures from which breads may be produced. El-Megeed et al., *Methods and compositions for improving the nutritive value of foods*, U.S. Patent 4,897,350.

The application should also review the relevant prior art, so far as it is known to the applicant, that is useful for understanding the invention. The applicant is not obliged to make a search of the prior art before filing an application, although a search is often prudent since search results can be helpful in preparing acceptable claims or helping the inventor determine whether it is worthwhile to file an application. However, if a search has been made, the application should disclose any relevant documents to the patent office. Often, an inventor will have some familiarity with relevant prior art and should disclose that art to the patent office. Documents should be cited where possible; if cited, the reference should be sufficiently complete to enable another person to identify and consult it, or a copy of the reference should be provided to the office.

Prior art is cited to the patent office for several reasons: as a matter of candor to the patent office; to protect the inventor’s interest in obtaining a valid patent; and to aid in describing the invention. If a patent is issued, the citation of relevant prior art makes it stronger, as the examiner will have reviewed the cited art and made the decision that the art does not prevent the grant of the patent. If the validity of a patent is challenged on the basis of a particular piece of prior art, the patent holder can point to the fact that the examiner, who is charged with determining novelty and inventive step, referred to that particular art and still found the invention to be patentable. Since the validity of an economically valuable patent is likely to be challenged, it is prudent to strengthen it by citing relevant prior art.

Applicants will sometimes be aware of prior art that is unlikely to be discovered by a patent office in a routine search. In such cases, the temporary advantage of withholding such information is more than offset by the potential liability of attempting to enforce an invalid patent, and in any event, withholding such information misleads the patent office and is unethical. In some countries, agents or attorneys can be disciplined for withholding such information, and the patent owner may be required to bear the costs incurred in invalidating the patent as well as damages from parties who were prevented from using the improperly patented invention.

A discussion of the prior art helps to define the subject matter of the patentable invention, (that is, that part of the inventor's work that is novel, that is not merely an obvious improvement on the prior art, and that is industrially applicable.) Referring to the prior art helps explain how the invention provides a new solution to an existing problem.

A patent application usually contains one or more technical drawings that aid in describing the invention and illustrate various aspects of the invention. The specification should contain a brief explanation of the types of drawings included. The technical description then recounts each element of the invention, typically referring to features of the drawings to help explain the invention.

The application must describe the invention, how it is made and how it is used. This description must be clear and unambiguous. If the invention is a device, each part should be identified, along with any necessary features of the part and the way it is attached to, or cooperates with, other parts of the device. This is often accomplished by a narrative description that refers to the drawings to illustrate relationships among the various parts.

If the invention is a composition of matter, the application should disclose the materials used to make the composition and the process for making it, together with any parameters necessary for the invention to work as claimed, such as proportions of ingredients or the range of temperatures at which the process works. If the invention is a process, each step should be enumerated along with required materials and the conditions under which the process operates. Where it is appropriate to describe the invention and its characteristics, use, and parameters, the specification may include tables showing the results of tests that have been performed, chemical formulae, flow charts, or equations, in addition to the narrative description.

The description of an invention may explain the underlying science or technology. A description of the science is not required, but if it is included, it must be correct. A person who is preparing a patent application should also take care in the selection of terms used in the description. While it is generally acceptable to create terms to describe elements of an invention, it is not acceptable to misapply terms that have an accepted meaning, because this misdescription could result in an unworkable invention and would at best fail the requirement of providing a clear and complete description.

The legal requirement to provide a description is not met if the application does not disclose the claimed invention. However, it is not necessary to recite a feature that is *inherent*. For example, if the application discloses that a bumper is faced with rubber strips to absorb shock, it is not necessary to recite that the rubber will be compressed on impact, as compressibility is an inherent feature of the rubber bumper strips. If the application recites that a substance is brought to a boil, it is not necessary to recite the temperature at which boiling occurs, as that is an inherent feature of the substance.

In preparing a technical description, it is essential to proceed in an orderly manner, as omission of an essential element, or failure to relate it to other elements of the invention, is a fatal defect in the application. It is useful to prepare a list or table of all elements of the invention—of all parts of a mechanical or electrical device, all elements of a chemical compound or composition, all steps in a process—and to assign a unique number to each element. These numbers can be used both to ensure that the description contains a complete list of the elements and to identify elements of drawings that may be submitted as part of the description of the invention.

It is often not possible to correct the omission of an element of an invention without introducing new matter, (that is, information) not in the original application, and most offices will refuse an amendment that introduces new matter into the application. In some jurisdictions, the applicant may re-file an application with a corrected description of the invention but takes the chance that an application with a later filing date will no longer be patentable. For purposes of determining whether an amendment adds new matter, the specification, drawing,

claims, and abstract of the application as filed should all be considered part of the original disclosure.[59]

ENABLEMENT

A patent application must disclose the invention in such full and clear terms as to enable a person skilled in the art to practice the invention on the basis of the disclosure and what is known in the art, without undue experimentation. The disclosure should provide a basis for each element of the claims. It must recite all essential features of the invention, the way the elements relate to each other, and any qualifications or limitations necessary to make the invention work as claimed. If an essential element is omitted, the disclosure is not enabling, the application will be refused, and in many countries, there is no procedure by which to correct this mistake.

A claim should not be broader than the invention disclosed in the application. The disclosure must describe the invention so clearly that the claims would be understood by a person skilled in the art most closely related to the invention. The degree of specificity that is required should be commensurate with the protection claimed.

Requiring an enabling disclosure limits an applicant's ability to obtain a patent and also maintain a trade secret in the invention. This requirement prevents a patent applicant from disclosing, for example, only the broad outline of the invention while withholding information that would enable others to make or use the invention. Any information needed to make the invention workable must be disclosed. Otherwise, the application may be rejected or, if a patent is issued, it may be held invalid and unenforceable by the courts.

[59] National practice differs as to what is considered to be part of the disclosure as well as when a disclosure is made. It is better practice to treat all information contained in the original application as part of the original disclosure for purposes of determining whether an invention has been adequately disclosed. Failing to provide an adequate disclosure may result in the permanent loss of patent rights, a harsh consequence for an applicant who has furnished sufficient information to enable another person to exploit the invention but has failed to comply with the formal requirement of placing the information in a particular part of the application. In some countries, it is an open question whether claims constitute part of the disclosure.

OPERABILITY

A patented invention must work as claimed. If it does not, it is not operable and is therefore unpatentable. A common type of defect in a patent application arises when the application omits an essential element of the invention, fails to describe its relationship to other elements of the invention, or misstates that relationship. In such cases, the invention *as described in the application* will not work as claimed.

Another situation in which an invention is unpatentable for lack of operability occurs when the application claims characteristics that the invention does not have, or results it does not produce. This problem can arise with any invention but an application is particularly susceptible to this type of mistake if the application is filed before there is reliable experimental data.

Most practitioners will, at some point, be asked to obtain a patent for a supposed "breakthrough" invention that, upon examination, does not work as the inventor asserts. In some cases, the results claimed for the invention may only be achieved by violating a law of nature. Cures for disease and perpetual motion machines are favorite examples of inoperable inventions proposed by sincere but naïve applicants. This is a third common example of lack of operability. Of course, scientific breakthroughs do occur. In such cases, it is useful to demonstrate the operability of the invention by conducting tests and avoiding a rejection for lack of operability by including actual test data in the application. Where it is unclear whether an invention works as claimed, the examiner may require testing of the invention by an independent body.

The pitfall of filing an application for an invention that does not work as claimed can be avoided by proper attention to the preparation of the application. It is not sufficient to recite the objective to be attained, for example, a supply of energy or cure for cancer. It is necessary to recite how that objective is to be achieved, in whatever degree of detail is necessary to make the invention understandable by a person skilled in the relevant art.

BEST MODE

The term best mode refers to the preferred way of carrying out an invention. A patent application typically discloses an invention in such a manner as to obtain the broadest possible coverage. If there is more than one way to carry out an invention, the inventor may be tempted to disclose examples that support the claims but are not especially useful, while keeping the most satisfactory embodiments as a trade secret or at least by simply failing to mention the more satisfactory features of the invention. If domestic law requires disclosure of the

best mode, the inventor cannot withhold information but must disclose the preferred embodiment of a product or best method of carrying out the process.

A best mode requirement is useful because it prevents an applicant from disclosing only enough information about an invention to support patent claims while maintaining as a secret the most beneficial way to carry out the invention. Without the requirement of an enabling disclosure and the disclosure of the best mode of carrying out an invention, a patent owner could obtain exclusive rights to the invention without truly giving the public the benefit of its bargain, that is, the ability to exploit the invention freely after the end of the patent term.

To satisfy the best mode requirement, it is not necessary for the applicant to designate a specific embodiment of the invention as the best. If one manner of carrying out the invention is preferred, the best mode requirement is satisfied if that embodiment is described in the application, even though it is not designated as such, and if there is not a preferred form of the invention, there is no obligation to designate one mode as "best." To satisfy the best mode requirement, it is only required to disclose the best mode that is known to the inventor at the time of filing.

DRAWINGS

Most patent applications should include one or more drawings that illustrate the invention. Most inventions are described—and understood—more easily with reference to a drawing, and in many cases, it is practically impossible to make an enabling disclosure without reference to a drawing.

Attorneys and agents who prepare patent applications will find it useful to establish a relationship with an experienced draftsperson to prepare the high-quality technical drawings required by most patent offices. This is helpful since patent rules may have strict requirements for patent drawings.[60] In addition to preparing drawings, the draftsperson can often make valuable suggestions about how best to illustrate the invention, and in some cases, the process of preparing drawings may reveal problems with the disclosure.

---

[60] Some patent offices permit the filing of *informal* drawings, that is, drawings that do not meet formal standards for drawings, provided the drawings are legible and adequately illustrate the invention. Before a patent issues, however, formal drawings usually must be submitted.

Drawings may show different views of a mechanical object or illustrate parts of an invention, including parts that are not ordinarily visible. Drawings may show the relationship among parts of an invention, or the relationship between parts of an invention and the items with which it is used. Electrical inventions usually require schematic drawings of electrical circuits. Processes may be illustrated by diagrams or flow charts showing the steps of the process. Inventions relating to microbiological inventions may provide data from stains, blots, or other tests that illustrate the characteristics of the microbiological entity, DNA sequences, or other pertinent information. Several different types of drawings may be needed to describe a single invention. Examples of drawings for several different types of inventions made by Egyptian inventors are shown in Figures 1–6.

Figure 1. Drawings for Device. From U.S. Patent 4,549,736 to Lotfy, *Racquet for Playing a Ball Game*

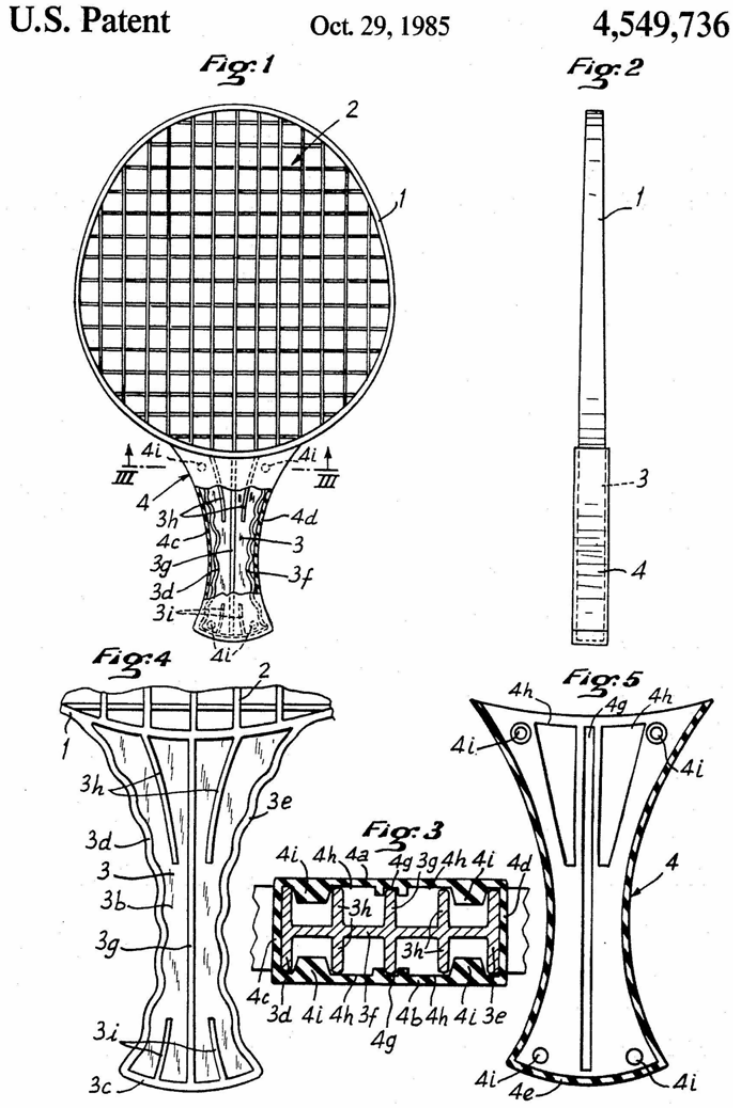

Figure 2. Drawing for Mechanical Device Showing Details of Construction. From U.S. Patent 6,050,246 to Abdelmesih for *Method and Device for Converting Conventional Gas Engines to Operate on Compressed Natural Gas*

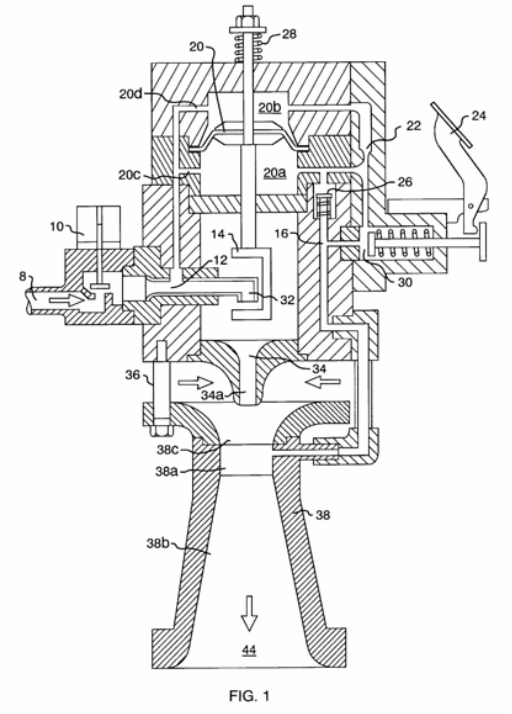

Figure 3. Drawing for Mechanical Device Showing Method of Use. From U. S. Patent 6,224,546 to Ramadan for *Stabilized Cephalic Medical Apparatus and Method of Using Same*

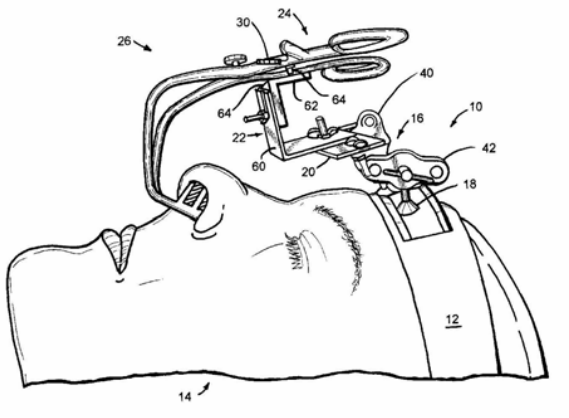

Figure 4. Drawings Illustrating Microbiological Process. From U.S. Patent 4,897,350 to El-Megeed *et al.*, *Methods and Compositions for Improving the Nutritive Value of Foods*

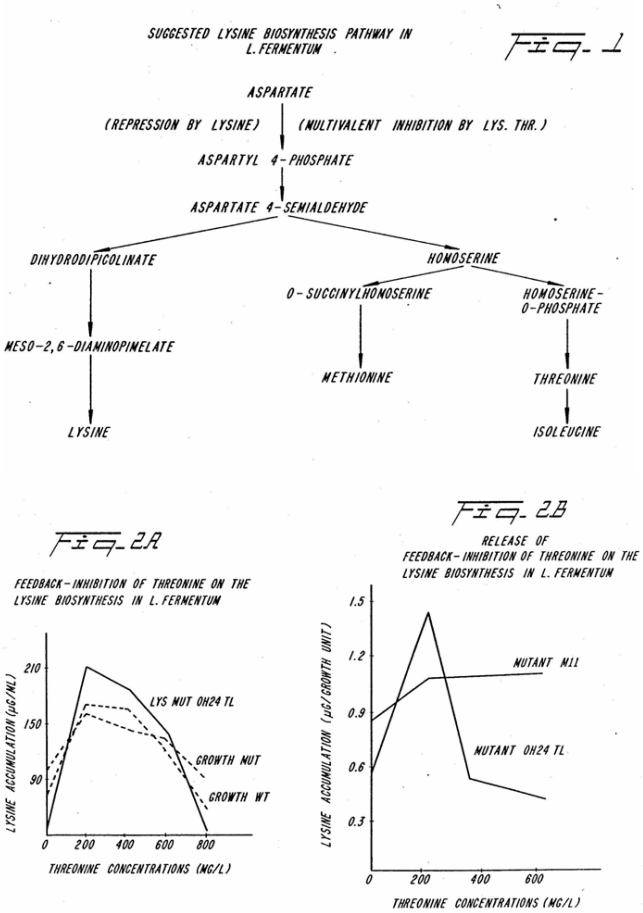

Figure 5. Drawings for Method of Character Recognition. From U.S. Patent 5,335,289 to Abdelazim for *Recognition of Characters in Cursive Script*

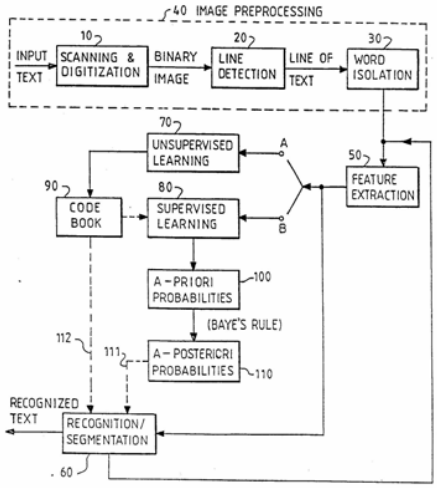

FIG. 1

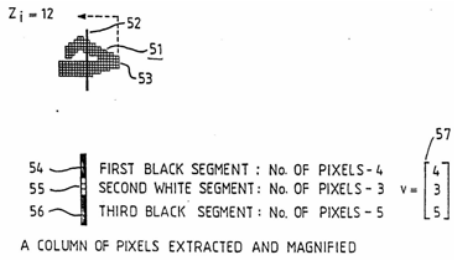

FIG. 2a

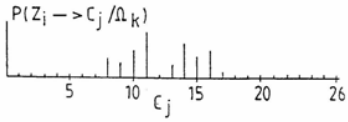

FIG. 2b

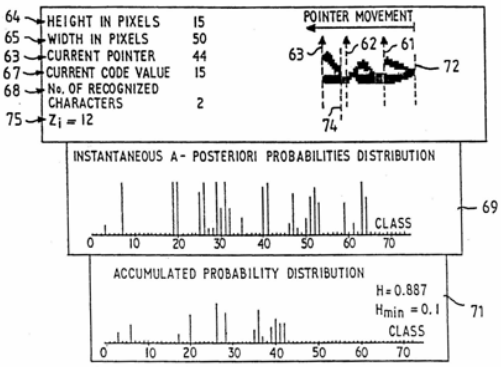

FIG. 3

Figure 6. Drawing for Electrical Device. From U.S. Patent 6,342,736 to Tatari *et al.* for *Inverterless Circuit or an Uninterruptible Power Supply*

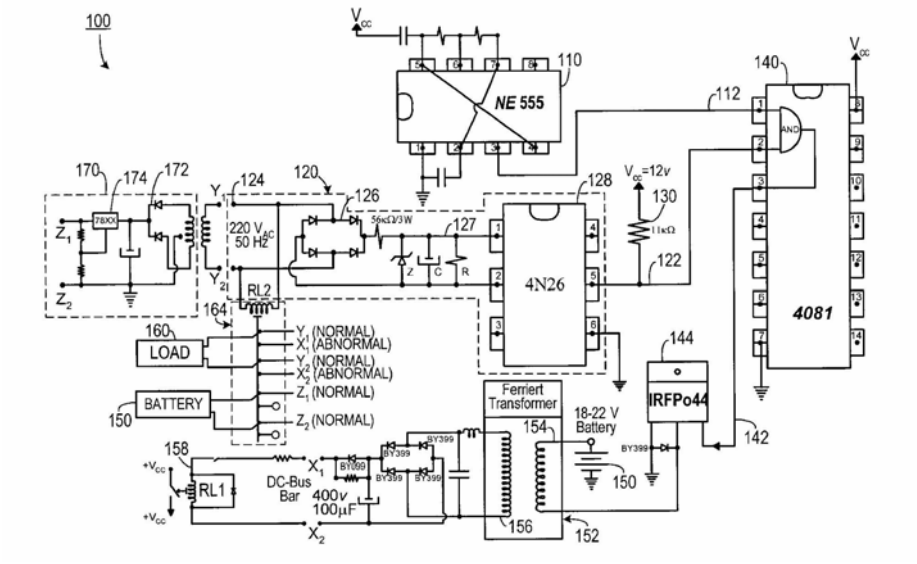

CLAIMING THE INVENTION

A patent *claim* is a formal legal description of an invention. The function of a claim is to specify or define the subject matter that the patent will protect."[61] Claims are typically introduced by language indicating that a claim is made, such as *I claim*, or *What is claimed is*.

A claim is written in a stylized format determined by national law and practice. In American practice, the claim is introduced by a preamble that indicates the general type of item being claimed, followed a statement "pointing out and distinctly

[61] *See, e.g.*, Andean Community Decision 486, Article 30: "Claims shall specify the subject matter for which patent protection is sought. They must be stated clearly and concisely and be fully substantiated by the description." Similarly, the European Patent Convention states, "The claims shall define the matter for which protection is sought in terms of the technical features of the invention." Implementing Regulations to the Convention on the Grant of European Patents. Rule 43(1). *Also see,* PCT Article 6: "The claim or claims shall define the matter for which protection is sought. Claims shall be clear and concise. They shall be fully supported by the description." *Compare* these provisions with U.S. practice, in which claims in the application as originally filed are considered part of the specification: "The specification shall conclude with one or more claims particularly pointing out and distinctly claiming the subject matter which the applicant regards as his invention." 35 U.S.C. 112, second paragraph.

claiming the subject matter which the applicant regards as his invention."[62] In practice, this portion of the claim recites the elements of the invention and their relationship to each other. In U.S. practice, the preamble is not considered to be part of the claim, an important point if an applicant relies on the claims as originally filed to fulfill part of the disclosure requirements for the invention.

Similarly, the European Patent Convention provides that claims "shall define the matter for which protection is sought in terms of the technical features of the invention" together with "a characterizing portion, beginning with the expression 'characterised in that' or 'characterised by' and specifying the technical features for which, in combination with the features stated under sub-paragraph (a), protection is sought."[63]

There are two basic approaches to claim drafting. In one, claims focus on the inventor's contribution over the prior art.[64] In the other, the focus of a claim is to identify the boundaries of the invention as a whole, including elements that are part of the prior art.[65] Under either system, the patent application must clearly distinguish between the invention and the prior art, and patent claims must be drafted to avoid a claim that merely consists of the prior art. Although countries may have a preference for one system or the other, it appears that these differences are narrowing.[66]

---

[62] 35 U.S.C. 112, second paragraph.

[63] Implementing Regulations to the Convention on the Grant of European Patents. Rule 43, paragraph (1) (b).

[64] This system is preferred in Europe. *See, e.g.*, Implementing Regulations to the Convention on the Grant of European Patents. Rule 43, paragraph (1)(a), which states that, where appropriate, claims should contain "a statement indicating the designation of the subject-matter of the invention and those technical features which are necessary for the definition of the claimed subject-matter but which, in combination, form part of the prior art."

[65] This system is preferred in the United States, United Kingdom, and Japan.

[66] *See, e.g.*, Beurskens, Michael, "Restricting Broad Claims in Germany: The Federal Supreme Court's Perspective (Blasenfreie Gummibahn—Weite Patentanspruche und Auswahlerfindung)," http://papers.ssrn.com/sol3/papers.cfm?abstract_id=646703, accessed April 24, 2009.

Two types of claims may be used: an *independent claim* that recites each element of the invention, and a *dependent claim* that refers back to the independent claim or to another dependent claim (and depends on that claim) and recites only additional elements or limitations. If permitted under domestic law, a *multiple dependent claim* (or *multiply dependent claim*) refers back to (and depends on) more than one independent claim. Dependent claims and multiple dependent claims incorporate all limitations of the claims on which they depend.

A claim must recite each essential element of the invention. To obtain the broadest coverage, the claim should not recite more elements than are necessary to make the invention operable. Each additional factor mentioned in a claim *narrows* the subject matter, or constitutes a *limitation* on the invention. Thus, the greatest scope of coverage of a patent corresponds to the simplest claim. If the language of claims is broad, the disclosure must be commensurately broad.

HOW ADDITIONS NARROW CLAIMS

In claims, less is more. Consider each of the following claim elements:

- A box
- A box with a lid
- A box with a lid, where the lid contains a window
- A box with a lid, where the lid contains a rectangular window

Since not all boxes have lids, adding the requirement of a lid narrows the scope of the claim so that it applies to a smaller set of boxes. Not all lids contain windows, so modifying the claim to say that the lid has a window further narrows the scope of the claim. Windows can be in many shapes, so this addition makes the claim apply to still fewer boxes, reducing (or narrowing) the scope of patent protection.

In a patent for a mechanical device, claim elements typically correspond to parts of the device, its construction, or use. In a claim for a device, it is not sufficient to claim only a “means for” accomplishing some objective without also reciting some element that would make the claim operable. That is, a person cannot simply claim a “means for” accomplishing some result, such as generating energy or alleviating pain, as such language does not meet the requirements of disclosure or enablement. However, the use of “means” language may be appropriate as an element of a claim if it is clear that there are several ways to accomplish the particular function *and* the particular means are supported by the disclosure. For example, a claim may refer to a means of attachment if there are several different ways to attach the item, any of which would be satisfactory, and

the various means are clear from the disclosure or, alternatively, are well-understood in the relevant field of technology. However, if a special means of attachment is required, the claim should include appropriate language describing that limitation.

Similarly, a process patent claim recites the steps of the process and perhaps its use. A process always includes more than one step, that is, a claim cannot simply state that it is “a process for” accomplishing some objective (for example, “a process for purifying water”). The claim is not enabling unless it recites each step of the process.

Shown below are selected elements from two different patents. Compare the drawing(s) and abstract for each patent with its corresponding claim(s). Each claim begins with a statement of claim and recites various elements of the invention and the relationships among those elements. Also note that the second example includes both independent and dependent claims and that successive claims recite increasingly more detail.

Figure 7. Abstract and Selected Drawings from U.S. Patent 4,222,585 to Crowthers *et al.* for *Folding Cart*

ABSTRACT

A folding cart comprising a fabric body and a collapsible tubular frame comprises tubular members extending longitudinally underneath the bottom of the fabric body for supporting the load and preventing the formation of pockets which impede unloading. Wheels are located behind and underneath the body, and are prevented from coming into contact with the body by protective fenders which also serve as collapsible braces for locking the frame elements in the open condition. The front edge of the bottom of the body is protected by a clamping member. The tubular members underneath the body are arranged substantially in an inclined plane in order to insure that the front edge of the body is able to come into contact with the ground despite irregularities therein.

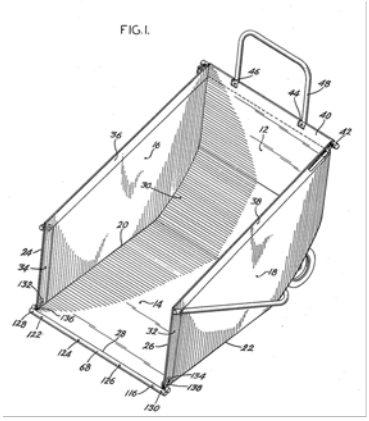

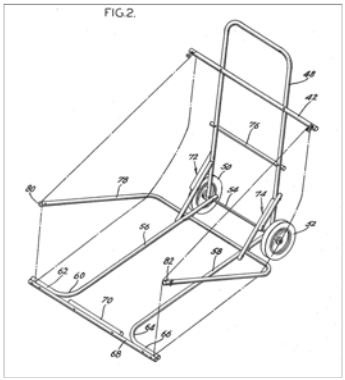

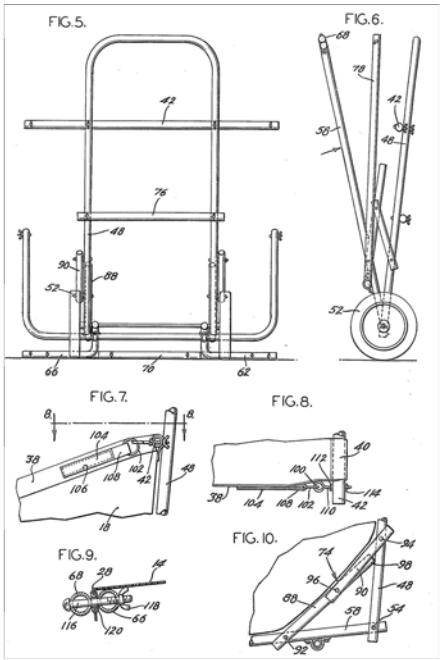

Figure 8. First Claim from U.S. Patent 4,222,585 to Crowthers *et al*. for *Folding Cart*

FOLDING CART CLAIMS

I claim:

1. A folding cart comprising:

a scoop-shaped body of flexible sheet material, said body, when in an opened condition, having an open front, a bottom wall, a rear wall, and side walls extending upwardly from the bottom wall;

a pair of wheels rotatable on an axis located adjacent the intersection of said rear wall and said bottom wall;

frame means comprising a first substantially rigid frame member extending substantially from the front edge of said bottom wall to said axis, and a second substantially rigid frame member extending substantially from said axis at least to the upper edge of said rear wall;

said first and second frame member being pivotally connected together substantially at the location of said axis, whereby the upper edge of said rear wall can be brought into close proximity to the front edge of said bottom wal ;

said first frame member comprising means extending longitudinally from the front edge of said bottom wall substantially to the location of said axis, and providing support for said bottom wall from the front edge to the rear of said bottom wall, said longitudinally extending means being spaced laterally inwardly from said side walls;

said wheels being located behind said body and laterally inward with respect to said side walls; and

means, connected to said frame means for preventing contact between said material and said wheels, when said body is in its opened condition.

Figure 9. Abstract, Figure and Selected Claims from U.S. Patent 4,556,576 to Gaehring for *Process for Preparing Tomato Products of Increased Consistency*

ABSTRACT

This invention provides a process for preparing blended tomato products of increased consistency wherein a concentrated tomato product is rapidly heated by direct contact with high temperature steam, rapidly expanding to a lower subatmospheric pressure and then milled through a screen having small openings. This process substantially increases the consistency of concentrated tomato products.

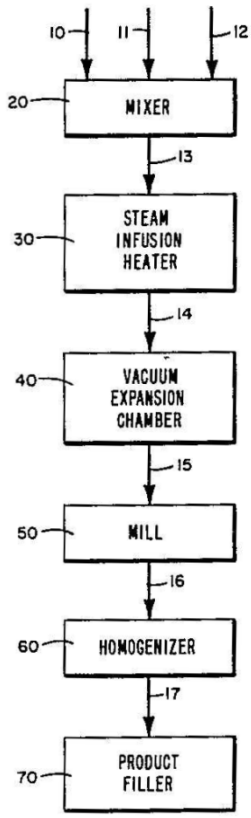

CLAIMS

I claim:

1. A process for preparing blended tomato products of increased consistency comprising:

(a) rapidly heating a concentrated tomato product to a temperature of at least about 250.degree. F. (120.degree. C.) by direct contact with high-temperature steam in a steam in fusion heater,

(b) rapidly expanding the heated concentrate to a lower subatmospheric pressure, and

(c) milling the rapidly expanded concentrate through a screen having openings smaller than 0.85 mm so as to cause a substantial increase in the consistency of said concentrate. 2. The process of claim 1 in which the tomato concentrate is rapidly heated to at least about 300.degree F. (150.degree. C.).

3. The process of claim 2 in which said heated concentrate is expanded to about 0.8 atmosphere absolute pressure or lower.

4. The process of claim 1 in which the concentrated tomato product contains at least a portion of the flavor additives used for preparing the blended tomato product

EXAMINATION AND PATENT PROSECUTION

Once an application is filed, it may be subject to examination. *Examination* is the process of reviewing an application and comparing it with any prior art to determine whether the application meets the requirements for patentability and otherwise conforms with the law. Examination generally includes a number of steps: reviewing the application to see whether it meets formal requirements, such

as a power of attorney or the presence of a claim; reviewing the application to determine whether it contains an enabling disclosure; and comparing the claims with the prior art to determine whether it meets the requirements of novelty, inventive step, and industrial applicability.

Often, the examination process includes an exchange between the applicant and patent examiner, with the examiner citing possible reasons for rejection and permitting the applicant to respond to these reasons. *Patent prosecution* refers to actions by the applicant, or his or her attorney or agent, to seek a patent. Patent prosecution includes preparing responses to office actions (that is, correspondence from the office noting problems or making requirements), making any necessary modifications to the application, and if necessary, appealing against decisions of the examiner. The primary elements of patent prosecution include proposing counter-arguments to those made by the examiner and amending the application to include any necessary limitations. An applicant can even broaden claims after filing if the application contains information that would support the new claims.

The objective of patent examination should be to identify every impediment to patentability and to give the applicant an opportunity to remedy it if necessary. The objective of the applicant should be to discover the broadest protection that is consistent with the applicant's invention and is not precluded by the prior art.

The relationship between an applicant (or applicant's agent or attorney) and the examiner should be independent and respectful but not adversarial. The examiner has no need to prevent the applicant from obtaining a patent. It is entirely appropriate for the examiner to offer helpful information to an applicant—although it is not the examiner's responsibility to take charge of patent prosecution. It is likewise not in the applicant’s interest to obtain an invalid patent, which cannot be enforced and may result in substantial liability for the owner.

PRIOR ART

Prior art is defined in the patent law of each country. At a minimum, it includes patents and publications published or laid open for inspection before the filing date of the patent application. It may also include oral presentations, offers for sale, and information that is part of the general knowledge. For example, a traditional craft may be part of the general knowledge. In that case, even if no one has written

about the traditional craft, a person could not obtain a patent on it and thereby deprive others of the ability to continue to make the item in the traditional way.[67] If an application has been filed in another country, the date of that first filing may be the relevant date for determining whether a particular reference (such as a patent or published application, or a publication, or other disclosure) is part of the prior art and therefore used to judge whether the application meets the requirements of novelty and inventive step.

The patent laws of most countries define the types of acts that will destroy the novelty of an invention and disqualify it for patent protection. Most countries have adopted an absolute novelty standard, so that any act that makes the invention "known" prior to filing would make the invention unpatentable. Other countries have defined the prior art (or the conditions that destroy patentability) in terms of specific acts, such as placing an invention on sale. In addition, many countries have adopted some form of grace period that mitigates the harshness of the novelty requirement as to some types of disclosures. Examples of some approaches are shown below.

Note that some types of disclosures are not considered as placing information into the prior art. In particular, a disclosure to a patent agent or attorney would not constitute such a disclosure, as the patent agent or attorney is precluded from revealing that information except as necessary to prepare the patent application and prosecute it before the patent office.

DISTINCTION BETWEEN NOVELTY AND INVENTIVE STEP

Novelty and inventive step are related concepts. In order to be patentable, an invention must both be novel (new) and contain an inventive step. Both conditions are determined with reference to the prior art. However, novelty and inventive step are distinct and independent conditions for patentability.

NOVELTY

An invention is *novel*, or *new*, if it is not identically disclosed in the prior art.. For a claim to be unpatentable for lack of novelty, the cited reference must teach every aspect of the claimed invention, either explicitly or impliedly. To establish lack of

[67] However, other means may be available to protect traditional knowledge, for example, under laws prohibiting acts of unfair competition.

novelty, each element of the invention must be either taught in the prior art or else inherently present in the invention.

An inherent characteristic is one that is unstated but is a natural characteristic of, or inseparable from, an element cited in an application. For example, an invention might disclose a corrugated cardboard box and claim—or fail to claim—the feature that the box can be closed by bending or folding the flaps. Whether stated or not, this feature does not add to the characteristics of the invention because it is inherent that corrugated cardboard can be bent or folded. Usually, chemical and physical properties, such as the melting point of a compound or capacitance of a semiconductor, are inherent, but most other issues of inherency, such as whether a method for monitoring a series electrical circuit also teaches a method for monitoring a parallel circuit, must be resolved by considering what is common knowledge of a person skilled in the relevant field of technology.

A claim should be rejected for lack of novelty only where all the features recited in the claim are present in a single item of prior art. That is, all the elements of the claim must be mentioned in a single patent or a single printed publication, or they must all be present in a single item that is part of the prior art as defined under the law of the country where the patent application is filed. Thus, all steps in a claim must have been part of a process that was already part of the prior art on the effective date of filing of the application, or all elements of a claim must be found in a product that was part of the prior art on or before the filing date or, where applicable, the priority date of the application.

> **Example:** The claimed invention is a car with a compact disc (CD) player. The claims are rejected for lack of novelty in view of Reference A, an advertisement, which discloses both a car and a cassette tape player, with a suggestion that such cars and sound equipment can be combined, because it would be obvious to a person of ordinary skill in the field of equipping automobiles with sound systems to substitute a CD player for a cassette tape player.

FOUR APPROACHES TO DEFINING NOVELTY

Egypt

"An invention shall not be considered wholly or partly new:

"If, before the filing date of the patent application, a patent application has been filed for the same invention or a patent was already issued in or outside Egypt for the invention or part thereof;

"If, before the filing date of the patent application, the invention was used publicly in or outside Egypt, or the description of which was disclosed in a manner so as a person having expertise in the art is able to exploit it."

In addition, "disclosure shall not include displaying the invention in national or international exhibitions within the six months before the date on which the application was filed."

— Law 82 for the Year 2002, Article 3.

Germany

"The state of the art includes all knowledge made available to the public by written or oral description, by use or by any other manner before the date relevant for the priority of the application," as well as the content of patent applications with earlier filing dates which have been made available to the public on or after the priority date of the later application. German law makes further exclusions and provides for a six-month grace period."

— Patent Act as amended by the Act on Improvement of Enforcement of Intellectual Property Rights of 31 July 2009, part 1, *section* 3.

FOUR APPROACHES TO DEFINING NOVELTY, CONTINUED

TRINIDAD AND TOBAGO

9. (1) An invention shall be taken to be new if it does not form part of the state of the art.

(2) The state of the art in the case of an invention to which an application for a patent or a patent relates shall be taken to comprise all matter (whether a product, a process, information about either, or anything else) which has at any time before the priority date of that invention been made available to the public (whether in Trinidad and Tobago or elsewhere) by written or oral description, by use or in any other way.

(3) For the purposes of this section, the disclosure of matter constituting an invention under subsection (2) shall not be taken into consideration if such disclosure occurred not more than one year immediately preceding the date of filing the patent application and the disclosure was due to or in consequence of—

(a) acts committed by the applicant or his predecessor in title; or

(b) an abuse committed by a third party with regard to the applicant or his predecessor in title.

(4) In the case of an invention consisting of a substance or composition for use in a method of treatment of the human or animal body by surgery or therapy or of diagnosis practised on the human or animal body, the fact that the substance or composition forms part of the state of the art shall not prevent the invention from being taken to be new if the use of the substance or composition in any such method does not form part of the state of the art.

— Patents Act, 1996 No. 21 of 1996, as amended by Act No. 18 of 2000, Article 9.

FOUR APPROACHES TO DEFINING NOVELTY, CONTINUED

United States

(a) A person shall be entitled to a patent unless—

(1) the claimed invention was patented, described in a printed publication, or in public use, on sale, or otherwise available to the public before the effective filing date of the claimed invention; or

(2) the claimed invention was described in [an issued patent], or in an application for patent published or deemed published ..., in which the patent or application, as the case may be, names another inventor and was effectively filed before the effective filing date of the claimed invention."

…

(c) A disclosure shall not be prior art to a claimed invention under subsection (a)(2) if—

(A) the subject matter disclosed was obtained directly or indirectly from the inventor or a joint inventor;

(B) the subject matter disclosed had, before such subject matter was effectively filed under subsection (a)(2), been publicly disclosed by the inventor or a joint inventor or another who obtained the subject matter disclosed directly or indirectly from the inventor or a joint inventor; or

(C) the subject matter disclosed and the claimed invention, not later than the effective filing date of the claimed invention, were owned by the same person or subject to an obligation of assignment to the same person.

— 35 U.S. Code section 102.

Note: The United States also provides a one-year grace period for disclosures made by the inventor or joint inventor or by another person who obtained the subject matter disclosed directly or indirectly from the inventor or a joint inventor, or where the subject matter disclosed had, before such disclosure, been publicly disclosed by the inventor, a joint inventor, or another who obtained the subject matter disclosed directly or indirectly from the inventor or a joint inventor.

INVENTIVE STEP

An invention which is not identically disclosed in the prior art is still unpatentable if it does not have an inventive step. An invention has an *inventive step* if it is not merely an obvious improvement on the prior art.

An item is ordinarily not patentably distinct from another item of the same type merely because the newer item is a different size.

For a claim to be unpatentable for lack of inventive step, the prior art must teach elements that, if modified in an obvious way, would disclose the claimed invention. That is, inventive step is absent if the modifications would have been obvious to a worker of ordinary skill in the art at the time the invention was made. For example, a carpenter of ordinary skill in the art of building furniture may find it obvious to connect elements of an item of furniture by using nails, screws, glue, dovetails, or mortise and tenon joints, among others, and the substitution of one common form of joinery for another would not be sufficient to distinguish a new piece of furniture from one previously known, even where one form of joinery gives a superior result.

In determining whether it would be obvious to modify the prior art to obtain a particular invention, it is necessary to consider the skill level of a person of ordinary skill in the relevant field of technology. As with novelty, determination, it is assumed that the person has an ordinary level of skill but has knowledge of all prior art.

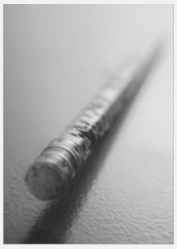

An item is ordinarily not patentable if it merely combines two known items that would naturally be used together, such as a pencil and eraser.

As with novelty, a determination of inventive step involves searching for elements that are already known. A determination of inventive step differs from a determination of novelty, however, in that multiple elements may be drawn from more than one piece of prior art—but only if it would be obvious to combine them to form the invention being examined.

An invention does not necessarily lack inventive step merely because each of its elements is found in the prior art. After all, every invention is based on elements already in existence. It is only appropriate to combine elements of prior art to form a rejection for lack of inventive step if there is some basis to suggest combining elements the elements. This basis could be a suggestion in the references themselves or common knowledge in the relevant field of technology. It is a common mistake to combine the teachings of two or more references to support a rejection based on inventive step where there is no grounds to suggest that it would be appropriate to combine those teachings to obtain the invention described in an application.

> An item is ordinarily not patentably distinct from another item of the same type simply because the newer item is made from a different material, such as a doorknob made from glass instead of metal.

Example 1: The claimed invention is a car with a compact disc player, and the claims are rejected over Reference B (a patent), which discloses a car with a cassette tape player but does not disclose a CD player. If a person with ordinary skill in this art would know that a CD player could be substituted for a cassette player in a car, the combination lacks inventive step.

Example 2: The claimed invention is a battery-operated CD player, and the claims are rejected over Reference B (a patent) in view of reference C (an advertisement). Reference B discloses a CD player with a power source from an alternating current (ac) outlet but does not disclose the use of batteries to power the CD player. Reference C discloses the use of batteries to substitute for an ac power source. If it would be obvious to a person with ordinary skill in this art that batteries could be substituted for ac power to operate a CD player, the combination lacks inventive step.

By far the most common mistake made in evaluating an invention or patent application for inventive step is to evaluate the invention in view of the knowledge taught by the patent application. Once a problem is solved, the solution often seems obvious. However, "[a]n inventor's explanation of how the invention works does not render obvious that which is otherwise unobvious."[68] It is appropriate to

[68] In Re Frank S. Glaug and Margareta A. Kato, United States Court of Appeals for the Federal Circuit, 00-1571 (Serial No. 08/455,374), decided March 15, 2002.

evaluate the obviousness of an invention at the time it was made, given the state of knowledge available at that time. If it appears that an invention was merely an obvious improvement over prior art, it may be appropriate to consider the history of the invention. Where an invention responded to a long-felt need or provided a solution that, at the time the invention was made, was thought to be unworkable, such factors suggest that the invention may indeed have satisfied the requirement of inventive step even if it now appears obvious.

Another relatively common mistake is to require too great a degree of inventiveness as a condition for patentability. This mistake sometimes arises out of a desire to ensure that an applicant "deserves" a patent. By unduly raising the standard for inventive step, an examiner may effectively convert the legal requirement of an inventive step into an inventive wall that can be overcome only rarely. This mistake is not a service to the inventor, who is unable to obtain a patent to which he or she is entitled under the law, and it is not a service to the country since it undermines the use of the patent system to encourage investment in new business enterprises.

DEFENSES TO ASSERTION OF LACK OF NOVELTY OR INVENTIVE STEP

There are three basic defenses to an argument that an invention is unpatentable because it is not novel or lacks inventive step.

1. **The application has an earlier effective filing date than the cited references.** This is sometimes referred to as "swearing behind" the references. An application is entitled to be evaluated on the basis of the technology that existed at the time the application was filed. If the patent application was filed before the references became part of the prior art, the cited art is not "prior art" in relation to the application and is therefore not a basis for rejecting it.

   The "filing date" of a patent application is not necessarily the date that the application was filed in the relevant patent office. Instead, it is necessary to look at an application's effective filing date. The effective filing date of a patent application is the earlier of its actual filing date or, if applicable, its priority date. If an application is a continuation or divisional application of another application, the effective filing date may be the actual filing date of the application or priority date based on the application on which the present application is based. In some instances, where a patent

application claims priority from more than one application, the application may have more than one effective filing date, with one date applying to some portions of the application and another date applying to other portions of the application.

2. **The cited references do not contain all the elements of the invention.**

   Lack of novelty. The question of whether an invention is novel is determined by comparing the claim with a single item of prior art. To show a lack of novelty, all elements of a claim must appear in the cited reference or, if not specifically mentioned, must be inherent.

   If the cited reference lacks an element of the claim, that reference is not sufficient to establish a lack of novelty of the invention. It is therefore useful to review carefully both the reference and the invention to determine whether all the elements of the invention are in fact included in the reference. Identifying the ways that a new item differs from what is already known is an essential skill for a patent attorney since this is the first and most basic element of determining patentability.

   Lack of inventive step. To show lack of inventive step, all elements of a claim must be taught by prior art, although not necessarily in identical form or in a single reference. Lack of inventive step can be shown if all the essential elements appear in one or more references and it would be obvious to combine those references, or if all the elements of the claim appear in a modified form so that it would be obvious to substitute the element in the claim for an element that is shown in a reference.

   If the reference does not cite all elements of the claim, even in modified form, then the references do not establish a lack of inventive step.

3. **Although the cited references contain the elements of the invention, it would not be obvious to combine them.** Whether an invention contains an inventive step is ordinarily determined by the judgment of an expert in the relevant field. It is not sufficient to establish that all elements of an invention are found in the prior art. That is true of virtually all inventions.

   The applicant can respond to a rejection based on lack of inventive step by arguing that it would not be obvious to combine the teachings of the references cited. References should not be combined if they concern only subject matter unrelated to the invention.

The applicant may also argue that while it may be obvious to try a particular combination, there are technical reasons that prevent, or are thought to prevent, that combination from working effectively. In such a case, the applicant would argue that the combination was not obvious because the prior art *teaches against* that combination. In that situation, the particular combination would not be unpatentable for lack of inventive step.

PATENT PROTECTION FOR LIVING MATTER

The requirement to protect inventions in all fields of technology includes living organisms. TRIPS Article 27.3 permits WTO Members to exclude from patentability "plants and animals other than micro-organisms, and essentially biological processes for the production of plants or animals other than non-biological and microbiological processes. However, Members shall provide for the protection of plant varieties either by patents or by an effective *sui generis* system or by any combination thereof." Thus, WTO Members are required to offer patent protection for microbiological inventions and may offer patent protection for any organism that otherwise meets the criteria for patentability.

Inventions relating to living matter are not new. French chemist Louis Pasteur received a patent in 1873 for a process, now called *pasteurization*, for killing undesirable microorganisms without also killing other microorganisms necessary to carry out the fermentation process.[69] The first patent claiming living matter as its subject was issued to Ananda Chakrabarty in 1981 for a genetically engineered strain of bacteria that would degrade (break down) hydrocarbons and could thus be used to clean up petroleum spills.[70]

Other research in this area has been directed toward the use of microorganisms that could be sprayed on fruit, such as strawberries, to prevent freezing. The first patent for a larger animal was granted for a transgenic mouse, that is, a mouse that had been genetically engineered to include certain human genes so that the mouse

---

[69] U.S. Patent No. 135,245, Pasteur, Louis, *Improvement in brewing beer and ale*, January 28, 1873. This patent refers to a French patent for "Process for making beer," issued June 28, 1871.

[70] U.S. Patent No. 4,259,444, Chakrabarty, *Microorganisms having multiple compatible degradative energy-generating plasmids and preparation thereof*, March 31, 1981.

could be used in the study of certain types of tumors that afflict humans but not mice.[71]

Although genetically engineered mice and microorganisms attract attention from the news media, the most significant volume of patents for living matter is for asexually reproduced plants, for which more than 20,000 plant patents have been issued in the United States. This is in addition to other types of patents, and other forms of protection for plants, such as plant variety protection, which are discussed below.

Patent protection for microorganisms creates interesting challenges for applicants and patent offices, particularly with regard to the requirement of making an enabling disclosure. In some cases, the materials involved in a patentable invention concerning living matter are well-known and readily available. In other cases, the building blocks of the invention are special strains of particular genetic makeup.

One solution to the problem of enablement has been to require the applicant to deposit a sample of the microorganism or other genetic material in a recognized depositary for such materials. These depositaries receive and store samples and make them available under agreed terms. The requirement of deposit may not be applicable in every case involving a patent for living matter, but in cases where it is necessary, failing to make the sample available may be considered to be a failure to make an enabling disclosure, which is a fatal defect in any patent application.

The requirement to make a deposit could easily become burdensome to an applicant who filed applications in more than one country. Moreover, if the responsibility for maintaining and distributing samples of microorganisms were placed with the industrial property office or other government agency, the prospect of storing and safeguarding those samples could quickly become burdensome for countries where patent applications are filed.[72]

---

[71] U.S. Patent No. 4,736,866, Leder *et al*., *Transgenic non-human mammals*, April 12, 1988.

[72] Maintaining live samples of microorganisms is no small task. Special handling is required to prevent inadvertent release and ensure public safety as well as to preserve the samples alive many years. In addition, some of the samples would likely pose a hazard if released into the environment or used for improper purposes. Thus, the process of preserving and maintaining microbiological samples requires significant financial and technical resources as well as provisions to ensure security against tampering, pilfering, or criminal activities.

These problems have been addressed by the establishment of a system of internationally recognized depositaries and agreement by various countries to recognize a deposit made in such a depositary as satisfying the deposit provisions of national law. The Budapest Treaty on the International Recognition of the Deposit of Microorganisms for the Purposes of Patent Procedure creates a system under which contracting parties to the treaty agree to recognize such international deposits as satisfying the deposit requirements of their national patent laws. The Budapest Treaty also addresses such issues as procedures for making a deposit, import and export restrictions, and procedures to be followed if a deposit is no longer viable.

DIVISION OF PATENT APPLICATIONS

Sometimes a patent application refers to more than one invention. In this situation, the applicant may divide the application into separate applications to preserve the date of the original filing for each divisional application, as well as the right to claim priority based on the initial filing date. This may be accomplished either as a result of examination or on the applicant's own initiative.[73] In either event, fees must be paid for the additional applications.

PRIORITY

The Paris Convention provides for a *right of priority*[74] that enables an applicant who is a national of one country that is a member of the Paris Convention to file an application in another country that is also a member of the Paris Convention and have the application treated, in that other country, as though it was filed on the date of the first-filed application. The TRIPS Agreement extends Paris Convention provisions on the right of priority to all WTO Members.[75]

The right of priority is available to any person who has filed an application for a patent, or for the registration of a utility model, industrial design, or trademark, in

---

[73] Paris Convention Article 4G.

[74] Paris Convention Article 4.

[75] TRIPS Article 2 requires WTO Members to comply with Paris Convention Articles 1–12, with regard to Parts I–IV of the TRIPS Agreement. Those Parts address standards concerning general provisions; the availability, scope and use of intellectual property rights; enforcement of intellectual property rights; and acquisition and maintenance of intellectual property rights and related *inter partes* procedures.

a Paris country or WTO Member. The priority right is also available to applicant's successor in title. Priority is available on the basis of any filing that is equivalent to a regular national filing under a country's domestic legislation. A regular national filing means any filing that is adequate to establish the date on which the application was filed in that country concerned, regardless of the ultimate disposition of the application.

The chief benefit of the priority right is that actions taken within the priority period cannot invalidate a subsequent filing in any other Paris country or WTO Member, provided that the subsequent filing is accomplished within the priority period. In particular, the filing of another patent application, the publication or exploitation of the invention, putting copies of the design on sale, or using the mark during that period, cannot give rise to any third-party right or any right of personal possession.[76]

The priority period is one year for a patent or utility model and six months for an industrial design or trademark. These periods are calculated beginning from the date of filing of the first application but excluding the day of filing the later application. If the last day of the priority period falls on an official holiday or other day when the patent office is not open for the filing of applications, the priority period must be extended until the first following working day.[77]

In some cases, an application may be withdrawn, abandoned, or refused without having been laid open to public inspection or giving rights to other parties. If that application has not served as the basis for a priority claim, and the applicant files a subsequent application concerning the same subject, in the same country, that subsequent application will be considered as the first application for purposes of establishing priority. In this case, the filing date of the subsequent application becomes the starting date for the period of priority, and the previous application—the application that has been withdrawn, abandoned, or refused—cannot thereafter serve as a basis for claiming a right of priority.[78] This provision could be of use in any country where an applicant has filed a defective application but is particularly

---

[76] Third-party rights acquired before the initial patent application date may be provided for under domestic law. *See* Paris Convention Article 4A(2).

[77] Paris Convention Article 4C(1)-(3).

[78] Paris Convention Article 4C(4).

useful in countries where the filing of an application does not make the contents of the application part of the prior art.

To take advantage of the right of priority, an applicant must make a declaration indicating the date of the previous filing and the country in which it was made, within a period to be determined in the country where the later application is filed. A country may require the applicant claiming priority to produce a copy of the previously filed application (description, drawings, etc.) on which the priority is based. It may also require the application to be accompanied by a certificate from the authority where the first application was filed, showing the date of filing, and the country may require a translation. The copy, certified as correct by the authority which received such application, does not require authentication and may be filed, without fee, at any time within three months of the filing of the subsequent application. The consequences of failure to comply with the applicable formalities can be set by domestic law but cannot go beyond the loss of the right of priority.

Although no other formalities can be required for the declaration of priority at the time of filing the application, further proof may subsequently be required. In particular, a person who claims priority must specify the number of the previous application on which priority is based.[79]

The right of priority can be applied to different types of filings, provided the applications contain the same subject matter. A utility model applicant can be filed on the basis of a priority right arising from the filing of a patent application, and vice versa. Where an industrial design application claims priority based on the filing of a utility model, the period of priority is the same as that fixed for industrial designs.[80] Likewise, an application for an inventors' certificate is treated the same as an application for a patent for priority purposes, and priority may be based on an application for a patent, inventors' certificate, or utility model registration.[81]

Sometimes a patent application is entitled to claim priority on the basis of more than one application. A claim for priority must be based on an application that

---

[79] Paris Convention Article 4D.

[80] Paris Convention Article 4E.

[81] Paris Convention Article 4I.

relates to the same subject matter as the application being filed. If there is unity of invention between the applications, a claim for multiple priorities cannot serve as a ground for refusing priority or a patent application, even if the applications originate in different countries or the application claiming one or more priorities contains one or more elements that were not included in the application or applications whose priority is claimed.[82]

Priority cannot be refused on the ground that the later-filed application does not contain some of the elements of the invention for which priority is claimed, provided that the documents pertaining to the earlier application, taken as a whole, specifically disclose those elements.[83]

INTERNATIONAL PROTECTION OF INVENTIONS

The fact that a patent can only be obtained for an invention that is novel poses some difficulties for applicants who want to obtain patents in more than one country since an issued patent in one country would prevent an applicant from obtaining a patent in any other country. This problem is addressed through the priority provisions of the Paris Convention and TRIPS Agreement, as discussed above.

The laws of some countries provide a *grace period*, typically six months to a year immediately preceding the filing date. During the grace period, actions by the inventor do not create a bar to patentability for lack of novelty or inventive step. A grace period helps to define what is meant by prior art under the law of a particular country. This period applies only to the issue of patentability in that country. It does not extend the priority period, and the availability of priority will not overcome a refusal for lack of novelty in a country that does not offer a grace period where the refusal is based on a disclosure before the earliest filing. Thus, a person who intends to file in countries that do not offer a grace period must file in those countries before making the invention public, even when the person's home country offers a grace period.

As a general rule, if protection is desired in more than one country, applications must be filed in every country where it is desired to have a patent. Alternatives to

---

[82] Paris Convention Article 4F.

[83] Paris Convention Article 4H.

this procedure have been created through agreements creating regional patent offices, such as the European Patent Office, the African Regional Industrial Property Office, and the *Organisation Africaine pour la Propriété Industrielle*. By filing with a regional office, an applicant in one country can file a single application and designate several countries in which he or she hopes to obtain a patent. Applications filed under these agreements are treated as a single application through a certain phase of processing and then eventually are either refused or issue as a bundle of national patents. Typically, it will be necessary to have an agent in each country at some phase of the proceedings.

As another option, there are a few situations in which one country agrees to give effect to patents issued in another country, either by agreement or under its domestic law.

Another alternative is provided under the Patent Cooperation Treaty (PCT), which allows the filing of a single "international application" and designating the countries in which patent protection is desired. This option creates a substantial benefit for parties wishing to obtain patents in many countries, since it creates a simple method of effecting the filing of a patent application in any of the countries that are party to the PCT, This is a considerable advantage since 148 countries were PCT members as of July 2014. The result of a successful filing is not an international patent—no such thing exists—but a bundle of national patents. By proceeding under the PCT, applicants can defer for several months the time when an applicant must engage a local representative or furnish translations into the languages of the office in the countries designated.

Proceeding under the Patent Cooperation Treaty is a particularly attractive option for Egyptian inventors who wish to file applications in multiple countries, because Egypt's Patent Office is a PCT Receiving Office, which means that it can accept PCT applications. This allows an applicant to file in a local office, to file its application in the Arabic language (although for most designated countries, translations will be required at a later time). It is also helpful that Egypt's Patent Office has been designated as a PCT International Search and Preliminary Examination Authority, one of only 18 patent offices to be so designated worldwide.

PATENT COOPERATION TREATY AND INTERNATIONAL PROTECTION OF INVENTIONS

The Patent Cooperation Treaty (PCT) offers a bridge between an increasingly global economy and legal systems that are based on national law. Businesses have to operate in both regimes. One critical decision is the choice of where to protect inventions. To obtain patent protection requires filing a patent application in each country where protection is desired. In some cases, it is possible to effect filing in several countries through a regional industrial property office, but whatever method is used, the cost of filing worldwide is likely to cost in excess of LE 650,000 (US 100,000) and in some technologies, several times as much.

Not only is the process of obtaining patent protection expensive, it offers no guarantees. In most patent offices around the world, approximately half of all applications filed will finally issue as patents. The percentage is slightly greater for internationally filed applications, many of which will have been amended as a result of examination in another patent office.

Not surprisingly, businesses would prefer to have the benefit of more information before making costly decisions regarding foreign filing. Unfortunately, the time for making filing decisions is short.

In most countries, an invention becomes unpatentable once a patent issues or the application is published or laid open for inspection in any country where an application has not already been filed. In some countries, the period between filing and issue is several years, but in a few countries, patents are granted and laid open for inspection almost immediately. In most countries, publication occurs after eighteen months.

For Paris Convention and WTO Members, the *right of priority* extends the time for filing to one year from the date of filing the first application in a Paris or WTO Member. This is still a short time in which to make important and costly decisions. Consequently, businesses often do not know whether they are investing in a patentable or unpatentable invention until after the deadline for foreign filing. This poses a dilemma for businesses—whether to gamble thousands of dollars to protect an invention that may prove to be unpatentable, or to fail to protect an invention in critical markets.

The PCT offers a partial solution. Applicants receive examination results from an initial filing, which can help them evaluate how much protection can be obtained. During that time, applicants can gain more experience in the market to help formulate marketing decisions.

RIGHTS CONFERRED BY A PATENT

A patent confers a specific set of rights defined under national law. Under TRIPS Article 28, a patent for a product must give the owner the right to exclude third parties from making, using, selling, offering for sale, or importing for those purposes the patented product, without the consent of the patent owner. If the invention is a process, the patent must give the owner the right to prevent third parties from using the patented process, and from making, using, offering for sale, selling or importing for such purposes at least the product obtained directly by that process. The patent law must also guarantee the owner's right to assign, transfer by succession, or license the patent.

TRIPS Article 30 allows WTO Members to make limited exceptions to the rights conferred by a patent, provided that such exceptions do not unreasonably conflict with a normal exploitation of the patent and do not unreasonably prejudice the legitimate interests of the patent owner, taking account of the legitimate interests of third parties.

Note, however, that a WTO Member's ability to create exceptions is not unlimited. The WTO has reviewed several complaints alleging that a Member has violated TRIPS in a manner that is not excused by TRIPS Article 30. In one decision,[84] a WTO dispute settlement panel found that a provision of Canadian law allowing the manufacture and stockpiling of pharmaceutical products within the last six months of the patent term for purposes of sale after the patent expired "constituted a substantial curtailment of the exclusionary rights required to be granted to patent owners under Article 28.1 to such an extent that it could not be considered to be a limited exception within the meaning of Article 30 of the TRIPS Agreement." The provision was therefore inconsistent with Canada's obligations under TRIPS Article 28.1, and Canada was obliged to change its law. However, the same panel upheld as consistent with TRIPS Article 30 a provision permitting potential competitors of the patent owner to use the patented invention without authorization during the patent term for the purpose of obtaining government marketing

[84] Canada — Patent Protection of Pharmaceutical Products (Complainant: European Communities), DS114 (19 Dec 1997).

approval, so that they would have regulatory permission to sell by the expiration of the patent term.[85]

This is a developing area of the law. Although a panel report in one dispute is not binding on panels in subsequent disputes, it is instructive to review panel reports and the reasoning applied, as it is likely that similar reasoning will be applied in other disputes. The most convenient source of information on such disputes is through the WTO website, at http://www.wto.int, which provides panel reports by topic and date.

WTO Members are also allowed to provide for use of inventions without authorization of the patent owner in certain exceptional cases, subject to limitations of TRIPS Article 31, relating to use without the authorization of the owner, and TRIPS Article 32, concerning forfeiture and revocation). In addition, the Paris Convention places conditions on the granting of compulsory licenses. Compulsory licenses should be granted only rarely, and it is wise to be aware of limitations on the government's ability to provide for a compulsory license or revoke a patent.

INFRINGEMENT

A person who carries out any of the exclusive rights of a patent, without the owner's consent, is said to *infringe* the patent. Infringement is established by comparing the claims of a valid patent with the allegedly infringing item and showing that the infringing acts were done without authorization of the owner.

There are no other requirements for showing infringement. The patent owner is not required to place the patent number on labels or otherwise give notice of infringement—although owners often choose to include markings to give notice that the invention is patented. Infringement does not depend on a showing that the alleged infringer intended to infringe or even had actual knowledge of the patent, although in some countries, criminal liability for infringement may require a showing of knowledge or intent. Notice of a patent is published in an official journal of the patent office of each country, and this notice provides constructive

---

[85] *EU v. Canada*, Dispute DS114, request for consultations 19 December 1997, Panel Report circulated 18 August 2000, http://www.wto.int/english/tratop_e/dispu_e/cases_e/ds114_e.htm, accessed April 24, 2009.

notice of the patent to all parties. In practice, patent owners usually give actual notice to persons believed to be infringing, along with a demand to cease the infringing activity before instituting a suit. In some countries, carrying out an act of infringement after receiving notice results in a higher level of liability for the infringer.

Infringement of a patent occurs when the allegedly infringing include all elements of the claim. If the patented invention is a device, the patent owner must be able to identify a part that corresponds to each element of the claim. If the patented invention is a process, it must include each step mentioned in the claim. If the invention is a composition of matter, the allegedly infringing item must include each ingredient mentioned in the claim. Claims also often indicate that the invention exhibits certain characteristics or operate within certain parameters. If the claims contain such language, the device must likewise exhibit those characteristics or operate within those parameters in order to constitute infringement. It is not necessary, however, that the allegedly infringing device contain all limitations of the claims.

CLAIM CONSTRUCTION

Claims define the legal limits of a patent. Judges and attorneys are therefore called on to interpret those claims and to give opinions as to whether a particular course of action would infringe the patent. Sometimes, the language of claims so clearly *reads on* a particular item of technology that no construction is necessary. (That is, the claim language includes elements that are found in the item.) In most cases, however, a determination of infringement depends on the interpretation of those claims.

Claim construction is both a legal and technical matter. As a legal document, a patent is subject to certain rules of construction. As a technical matter, claims must be interpreted in terms of technology, and the advice or testimony of an expert in the relevant field of technology is essential. It may also be useful to have the advice or testimony of a person who is expert in the field of patents.

The first step in claim construction is to look at the plain language of the claim, read in light of the disclosure. In many cases, the “plain language” is highly technical and appears to be anything but plain. However, the first step is to consider the language of the claim relative to the allegedly infringing item and attempt to identify in the allegedly infringing item an element that corresponds to each element in the claim. If the item contains an element that corresponds to each

element of the claim, the claim is said to read on the item, and there is apparent infringement. The disclosure should also be reviewed with a special view to determining whether it contains any limitations not reflected in the claim.

If there is not apparent infringement because one or more elements of the claim are absent from the allegedly infringing item, one must also consider whether the item contains elements that are, from a technical point of view, equivalent. If so, the item may be infringing. Whether an element is equivalent is a technical matter, based on the judgment of a person skilled in the relevant technology.

PRELIMINARY MATTERS

A suit for patent infringement usually is preceded by a demand to the alleged infringer to cease infringement. If the demand is successful, it may obviate the need for litigation, which is expensive and time-consuming and poses a risk for both parties. If the demand is unsuccessful, the patent owner can point to the effort and ask the court to treat the infringement as intentional or willful. In some countries, this may affect an award of damages or permit criminal enforcement if provided under the national law.

ENFORCING PATENT RIGHTS

A claim for patent infringement is brought in the court of competent jurisdiction, as set forth under the law of the country where the patent is effective and where it is possibly being infringed. In countries where the law permits, the owner may seek criminal enforcement through the channels identified for that purpose, such as making a complaint to the police. Since patents are primarily an economic tool, however, the most desirable enforcement is usually accomplished by putting an end to the infringement and recovering the economic benefit for the patent owner.

In some countries, a specific court is designated for certain intellectual property cases. That court may have special rules for patent cases, or particular matters may be specified in the patent law. However, in the absence of any special provisions, the civil procedures and evidentiary rules that apply in patent cases are the same as those set for other types of commercial cases.

Patent cases usually require the appointment of an expert. Experts in patent cases should be qualified both in the relevant field of technology and also in the application of the patent law to the particular technology at issue in the case.

The patent owner has the burden of showing infringement. A *prima facie* case is made when the owner presents evidence that he or she owns the patent, that the alleged infringer is engaging in one or more of the acts to which the patent provides exclusive rights, and that the patent claims read on the infringing activity—that is, that the infringing activity concerns an item that corresponds to each element of the claim. The alleged infringer then has the burden of demonstrating any defense. This can be done by defeating any element of the patent owner's case, for example by showing that the object of the suit does not correspond to the claims of the patent or that the allegedly infringing activity was authorized, by an agreement with the patent owner or through some other means, such as use prior to the publication of the patent or a compulsory license. The other primary defense is to attack the patent itself, to show that it is invalid because it fails to meet the requirements for patentability. The elements of a claim for infringement and possible defenses are shown below.

CIVIL REMEDIES

The patent owner may ask the court for any remedy available under domestic law. These should include an *injunction*, or court order to the alleged infringer to cease infringement; an order suspending customs release if the infringing goods are being imported; damages to compensate for the injury; recovery of profits and/or pre-established damages if provided by domestic law; and the owner's expenses of the litigation, including the patent owner's appropriate attorney fees. The amount of damages may depend on showing that the infringer knew or had reasonable grounds to know the activity was infringing.

DEMONSTRATING PATENT INFRINGEMENT

A charge of patent infringement must allege

- Rights under a patent. The proper party to bring suit is the patent owner or a licensee authorized by the owner to bring suit.
- That the defendant is engaging in one of the acts to which the patent confers exclusive rights.
- ❖ If the patent is for a product, that the defendant is
  - Making the product,
  - Using the product,
  - Offering the product for sale,
  - Selling the product, or is
  - Importing the product for the purposes of making, using, offering it for sale or selling such product.
- ❖ If the patent is for a process, that the defendant is
  - Using the process or
  - Making the product obtained directly by that process,
  - Using the product obtained directly by that process,
  - Offering for sale the product obtained directly by that process,
  - Selling the product obtained directly by that process, or is
  - Importing the product obtained directly by that process for the purposes of making, using, offering for sale or selling such product.
- That the patent claims cover the defendant's product or process. To establish infringement, each element of a claim must be present in the product or process alleged to be infringing.
- That the defendant does not have the patent owner's authorization to carry out such acts.

DEFENSES TO CHARGE OF PATENT INFRINGEMENT

A defendant may defend against a charge of patent infringement by showing any of the following:

- Plaintiff is not a proper party to bring suit
  - Not the patent owner and
  - Not the exclusive licensee of the patent and authorized by owner to bring suit.
- The plaintiff does not have a patent on the relevant technology, or the patent is no longer in effect because
  - The patent term has expired
  - The patent has lapsed for failure to pay taxes or maintenance fees.
- Defendant has not performed the acts alleged. It is difficult to prove a negative, but it may be possible to show that
  - The defendant's product or process are not those covered by the plaintiff's patent or
  - The defendant was not a party to the acts of infringement alleged by the plaintiff.
- Defendant was authorized to perform the acts alleged to be infringing:
  - By agreement with the patent owner or the owner's agent or
  - Acting under a license to another party or
  - Otherwise authorized, for example, by a compulsory license.
- The patent claims do not read on the allegedly infringing product or process. The patent owner must show that the infringing activity incorporates each element of one or more patent claims.
- The patent is invalid and has been (or should be) canceled.

PATENT INVALIDITY

An invalid patent cannot be infringed. For this reason, the validity of a patent is often questioned as a defense to a charge of patent infringement. In many jurisdictions, this is raised through a cancellation action before a court other than the court hearing the infringement action.

To establish patent invalidity, a party must show that the application or patent failed to meet some legal requirement at the time the patent was granted. That usually requires showing at least one of the following:

- The patent claims only unpatentable subject matter, for example, a law of nature or scientific principle or naturally occurring substance.
- The application is deficient in some material way. For example, it may fail to
  - Name the true inventor (or it may name a person who is not a true inventor).
  - Provide the full and complete technical disclosure required by the law in most countries;
  - Disclose the best manner of carrying out the invention, if required by the law of the jurisdiction.
- The applicant made a material statement that is false.
- The invention was anticipated by prior art, that is, it was not novel in view of the prior art.
- The invention lacks an inventive step over prior art. Both novelty and inventive step are evaluated with reference to technology that existed or was known at the time the application was filed, taking into account claims of priority and a grace period, if applicable.
- The invention is not industrially applicable.

The party asserting invalidity must introduce evidence in support of its allegations and demonstrate its materiality.

5 OTHER STATUTORY FORMS OF PROTECTION FOR INVENTIONS

Patents are the most usual form of protection for inventions. However, there are a number of other forms of protection that may be available for inventions that are not within the coverage of the patent law or do not meet the requirements for patentability.

UTILITY MODELS

A *utility model* protects industrial innovations of less importance than those that are the subject of a patent. Usually, novelty is a requirement for a utility model registration, but inventive step is not required.

The type of protection offered by a utility model is essentially the same as that offered by a patent. However, the protection is intended for innovations that, while novel, make only minor improvements compared with prior art. Two examples of inventions protected by a utility model registration or patent are shown on the following page.

The principal difference between a patent and a utility model is a lower requirement for inventive step, or in some countries, the absence of an inventive step requirement. The term of protection for a utility model is typically shorter than for a patent. Most countries do not offer utility model protection, and those that do offer utility model protection often do so without a requirement that the application be examined. Some countries limit the availability of utility model protection to certain fields of technology or to products rather than processes,[86] restrictions that the TRIPS Agreement prohibits for patents.

The purpose of this form of protection is to offer a simpler and less expensive method of protection for simple innovations. In some countries, this general form

[86] "Protecting Innovations by Utility Models," WIPO, http://www.wipo.int/sme/en/ip_business/utility_models/utility_models.htm.

of protection is described by some other term, such as a petty patent (Germany), innovation patent (Australia), or utility innovation (Lao PDR).

Figure 10. Examples of Registered Utility Models

Pet Umbrella, China Utility Model Registration No. 3134541, image at http://global.rakuten.com/en/store/higasa/item/3700/

Mechanical Pressure Hanger for Used Paper, Japan Utility model patent registration No.3172730.

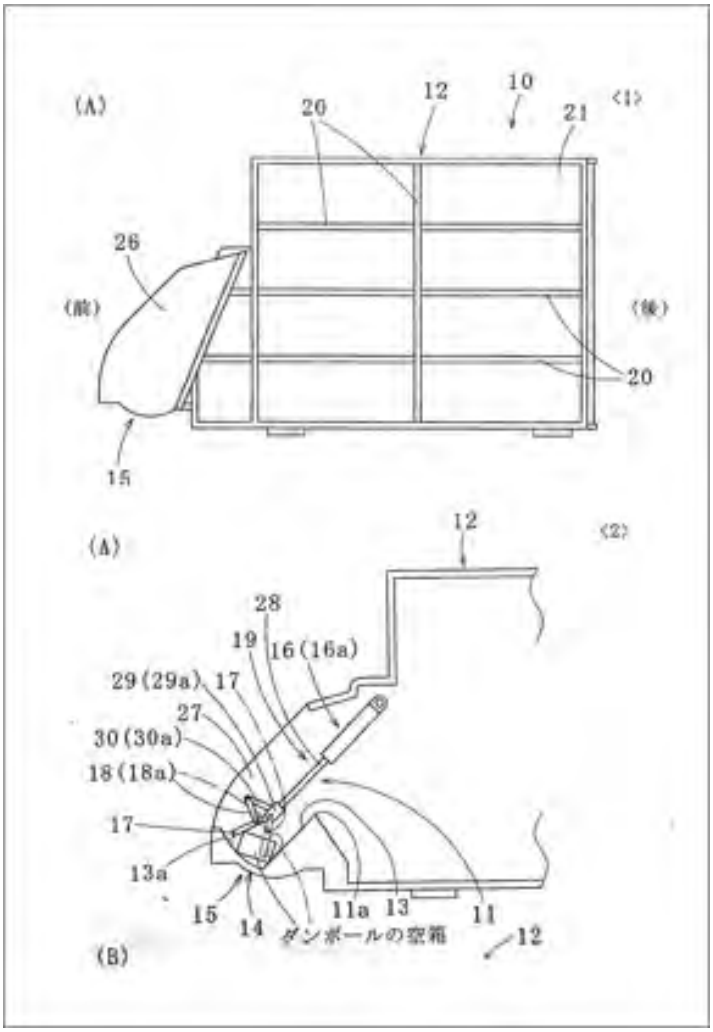

INVENTORS' CERTIFICATES

Inventors' certificates recognize the contributions of inventors and other innovators. This form of recognition was developed as an alternative to the patent system. Its aim was to provide a method for recognizing and promoting innovative solutions to problems while avoiding the creation of private property rights, which were held in disfavor in certain countries with socialist or centrally planned economies. In countries that discouraged market activities, inventors' certificates were often preferred by inventors because they offered a certainty of some reward, while constraints on the market system made it impracticable to seek the potentially greater rewards of the patent system.

Unlike the patent system, an inventor's certificate is not necessarily limited to patentable inventions and does not create exclusive rights in its subject matter. Instead, it provides a system of recognition that may be accompanied by a monetary or other award. In economic terms, inventor's certificates have never been of great importance. With the breakup of the former Soviet Union and the move of most Eastern bloc states from centrally planned economies to market economies, the importance of inventors' certificates has diminished further.

OTHER TYPES OF PROTECTION FOR INVENTIONS

Paris Convention Article 1(4) provides that "Patents shall include the various kinds of industrial patents recognized by the laws of the countries of the Union, such as patents of importation, patents of improvement, patents and certificates of addition, etc."

Patents of importation (sometimes also called patents of introduction, confirmation or revalidation) ... are generally patents of relatively short duration granted for an invention which has already been patented in a foreign country and which therefore has lost its novelty, but which is nevertheless protected by a patent of importation in the expectation that the patentee will exploit the invention in the country concerned.[87]

---

[87] Bodenhausen, G.H.C., *Guide to the Application of the Paris Convention,* BIRPI (now WIPO) (Geneva 1968), at 27.

This type of protection is occasionally available but is no longer a common feature of the protection available for inventions.

Patents of improvement are patents granted for an improvement on an existing invention. In some countries, patents of improvement were subject to "special provisions as to duration and the payment of maintenance fees"[88] Under TRIPS, it is likely that such inventions will simply become the subject of a patent for an improved product or process or, alternatively, if the inventive step is limited, the subject of a utility model.

Patents or certificates of addition are "granted in a similar way for additions to an invention which are not necessarily also improvements."[89]

UTILITY MODELS AND INVENTORS CERTIFICATES IN INTERNATIONAL AGREEMENTS

The most important international requirements relating to utility models and inventors' certificates are found in the Paris Convention. Utility models are included in the definition of industrial property of the Paris Convention, Article 1(2). Although it was proposed to add inventors certificates as a type of industrial property mentioned in Paris Convention Article 1(2),[90] this was never done.

Since inventors' certificates are not specifically mentioned as objects of industrial property protection, and since they do not convey the type of exclusive rights that are typical of patents, it is not clear whether inventors' certificates should be considered to be a form of intellectual property for such purposes as the right of national treatment. On the other hand, Paris Convention Article 1(3) states, "Industrial property shall be understood in the broadest sense ...." Taking into account this guidance, and the fact that inventors' certificates are treated the same as patents for other important purposes, it would be wise to extend national treatment to inventors' certificates.

---

[88] *Id*.

[89] *Id*. Footnote omitted.

[90] *See* AIPPI Yearbook 1966/II, Q42, 26th Congress (Tokyo, April 11-16, 1966), available from http://www.docstoc.com/docs/4159339/QUESTION-The-inventors-certificate-Yearbook-II-a-Year-pages, accessed March 12, 2009.

Paris Convention Article 2 provides for national treatment of all Paris country nationals with regard to the protection of industrial property and the same legal remedy against any infringement of industrial property rights. Paris Convention Article 4A establishes a right of priority for any person who has filed an application for a patent, utility model, industrial design, or trademark. The period of priority for patents and utility models is 12 months.[91] However, where an industrial design is filed in a country by virtue of a right of priority based on the filing of a utility model, the period of priority is the same as that for industrial designs, which is six months.[92] Furthermore, Paris Convention Article 4A provides that it is permissible to file a utility model in a country by virtue of a right of priority based on the filing of a patent application, and vice versa.[93]

The provisions of Paris Convention Article 5, relating to forfeiture and compulsory licenses of patents, likewise apply to utility models.[94] Paris Convention countries cannot require an indication or mention of a utility model upon goods as a condition of the right to protection.[95] Paris Convention countries must grant temporary protection to utility models as well as to patentable inventions, industrial designs, and trademarks.[96] Finally, each Paris Convention country must establish a special industrial property service and central office for the communication to the public of patents, utility models, industrial designs, and trademarks.[97]

Paris Convention Article 4I provides that applications for inventors' certificates must give rise to the same right of priority as is provided for patents. By the same token, an applicant for an inventor's certificate is entitled to enjoy a right of priority based on an application for a patent, a utility model, or an inventor's certificate.

---

[91] Paris Convention Article 4 C.

[92] Paris Convention Article 4 E(1).

[93] Paris Convention Article 4 E(2).

[94] Paris Convention Article 5 A.

[95] Paris Convention Article 5 D.

[96] Paris Convention Article 11 (1).

[97] Paris Convention Article 12.

The Budapest Treaty also is applicable to utility models and inventors' certificates. Budapest Article 2(i) provides that references to a "patent" shall be construed as references to patents for inventions, inventors' certificates, utility certificates, utility models, patents or certificates of addition, inventors' certificates of addition, and utility certificates of addition.[98]

[98] Budapest Treaty Article 2(i).

6 INDUSTRIAL DESIGNS

An *industrial design* is any composition of lines or colors, or any three-dimensional form that gives a special appearance to an article and can serve as a pattern for a product of industry or handicraft.[99] The term *industrial design* encompasses both drawings (that is, two-dimensional works) and models (three-dimensional works).

The purpose of industrial design law is to provide a means to protect ornamental designs for useful objects. Although industrial design law is a distinct aspect of intellectual property law, it shares some characteristics with patent law and some characteristics with copyright. Subject matter that is protected under industrial design law in one country may be protected under patent law, copyright law, or even unfair competition law in another.

PROTECTED SUBJECT MATTER

The subject matter protected by industrial design law is the ornamental design for a useful object. The design for an article consists of the visual characteristics "embodied in or applied to an article," or to a portion of an article, "but not the article itself."[100] "Since a design is manifested in appearance, the subject matter of a design … may relate to the configuration or shape of an article, to the surface ornamentation on an article, or to both."[101]

---

[99] *See, e.g.*, industrial design definitions from the Trinidad and Tobago Industrial Designs Act, 1996 (No. 18 of 1996), article 3: "any composition of lines or colours, any three-dimensional form or any material whether or not associated with lines or colours, … where such composition, form or material gives a special appearance to a product of industry or handicraft, can serve as a pattern for a product of industry or handicraft and appeals to and is judged by the eye," but provides that protection "does not apply to anything in an industrial design which serves solely to obtain a technical result and to the extent that it leaves no freedom as regards arbitrary features of appearance"; *also see* definition from the Cartagena Agreement Decision 344, article 58: "[a]ny arrangement of lines or combination of colors, or any two-dimensional or three-dimensional outward shape, incorporated in an industrial or craft product in order to give it a special appearance without the intended purpose or use of the said product being thereby changed, and which serves as a model or pattern for manufacture, shall be considered an industrial design."

[100] MPEP 15.02, *citing Ex parte Cady*, 1916 C.D. 62, 232 O.G. 621 (Comm'r Pat. 1916).

[101] MPEP 15.02.

Design "must be a definite, preconceived thing, capable of reproduction and not merely the chance result of a method.… The design for an article consists of the visual characteristics or aspect displayed by the article. It is the appearance presented by the object which creates an impression through the eye upon the mind of the observer." [102]

"Design is inseparable from the article to which it is applied. Design cannot exist alone merely as a scheme of ornamentation."[103] A design that is merely a scheme of surface ornamentation and not integral to the article is more properly protected by copyright.

Invention is often a blend of function and ornamental design. A useful article may possess both functional and ornamental characteristics. Technical or functional features of a design should be protected under patent law, as they are not properly the subject of industrial designs protection. In practice, however, it may be difficult to separate the utility of an article from its ornamentality.

CONDITIONS FOR PROTECTION

An industrial design is generally protected if it is new or original and not dictated solely by technical or functional features. TRIPS Article 25 requires Members to protect "independently created industrial designs that are new or original. Members may provide that designs are not new or original if they do not significantly differ from known designs or combinations of known design features. Members may [also] provide that such protection shall not extend to designs dictated essentially by technical or functional considerations."

In most countries, industrial designs are protected under a system of registration. This system may rely strictly on registration, in which case entitlement to protection is determined by the courts when the applicant attempts to enforce industrial design rights, or it may include examination similar to that for patents.

---

[102] *Id*.

[103] *Op. cit, citing Blisscraft of Hollywood v. United Plastics Co.*, 189 F. Supp. 333, 127 USPQ 452 (S.D.N.Y. 1960), 294 F.2d 694, 131 USPQ 55 (2d Cir. 1961).

In the United States, industrial designs are protected as *design patents* if they are new (in the same sense as patents), ornamental (as opposed to useful), and are not merely an obvious improvement over similar designs.

DRAWINGS

Because the essential nature of an industrial design lies in the appearance of the article, it is essential that the applicant submit drawings that fully disclose the design. An application to register a design for a three-dimensional article should include as many views as are required to define the design. Unlike patents for useful items, an industrial design application ordinarily includes little or no narrative description other than a title or brief statement of the nature of the item to which the design relates and an explanation of the drawings. Examples of drawings for ornamental designs are shown in Figures 11, 12, and 13 for three different types of useful objects.

INDUSTRIAL DESIGNS AND PATENTS

The chief distinction between an industrial design registration and a patent is that a patent is directed toward utilitarian aspects of the invention (a requirement described as utility or industrial applicability), while an industrial design protects ornamental aspects of useful articles. (A patent for a useful invention is sometimes referred to as a utility patent.) A specific item may have both forms of protection. For example, if a lamp works according to a new principle (such as introducing the use of the electric light bulb), that new technical advance might be protected by a (utility) patent. If the lamp also is of a particular design that gives it a certain "look" or fashion, that ornamental design could be protected by registering the industrial design.

While a patent application requires a detailed technical description of the subject matter of the application, and the scope of coverage is governed by the precise language of claims, an industrial design is principally disclosed by a picture—a drawing or photograph—that shows the appearance of the item. If claims are used, they are formal in nature—*I claim the design as shown*. Any functional feature of the object, or any part of its appearance that is dictated by its function, should not be protected as an industrial design.

Figure 11. Figures from U.S. Design Patent D266,320 to Khoury for *Ornamental Design for Hover Craft*

FIG. 1.

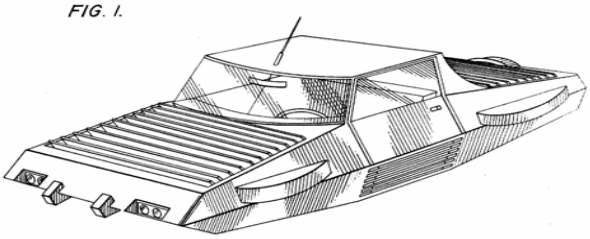

FIG. 2.

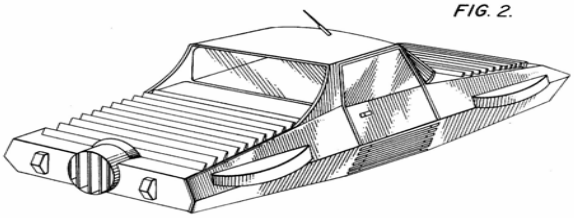

FIG. 3.

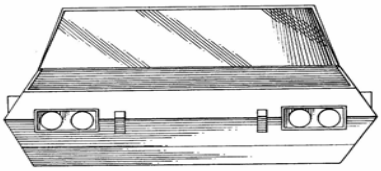

FIG. 4.

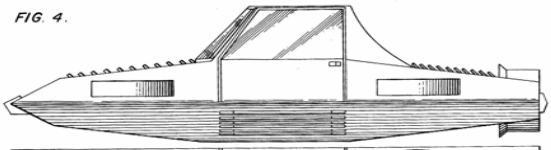

FIG. 5.

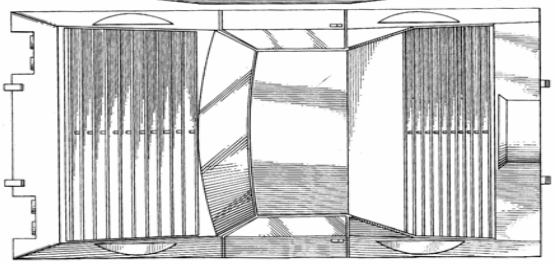

Figure 12. Figures from Design Patent D506,812 to Rivas for *Sink and Pedestal*

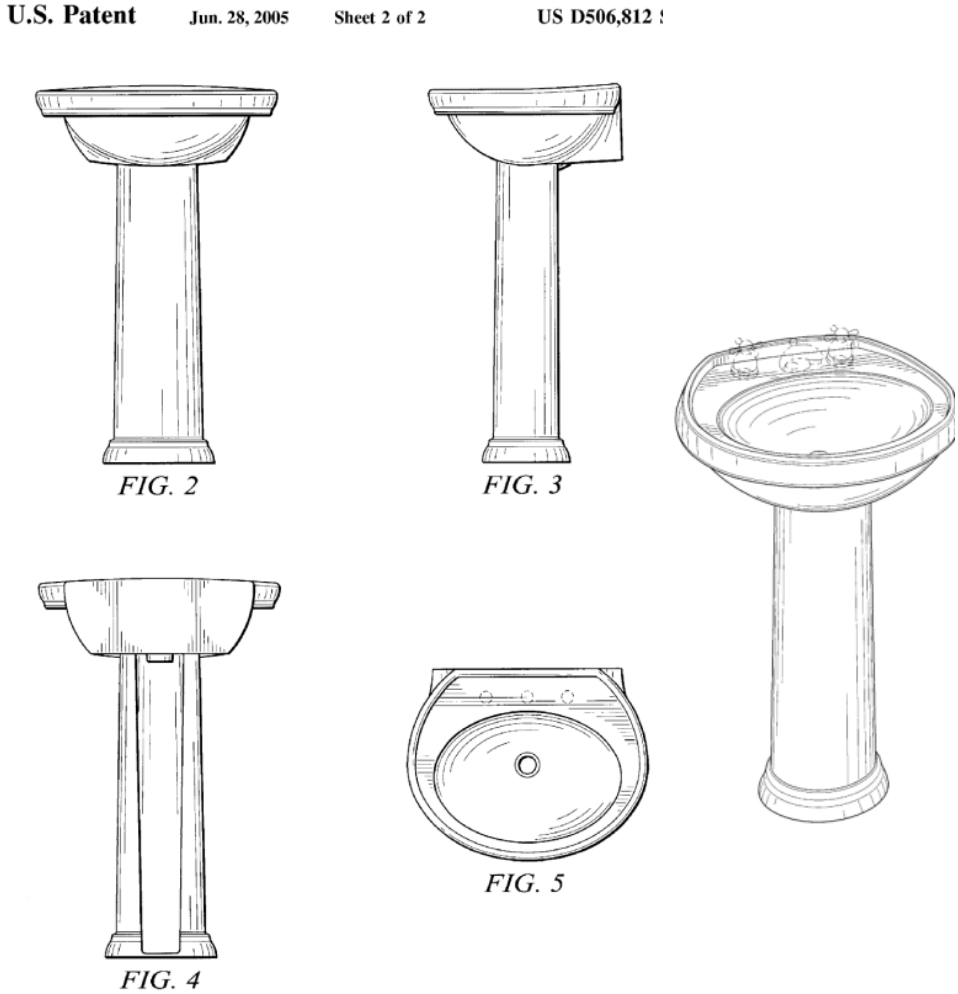

Figure 13. Figures from U.S. Design Patent D394,813 to Homsy for *Combined Bottle and Cap*

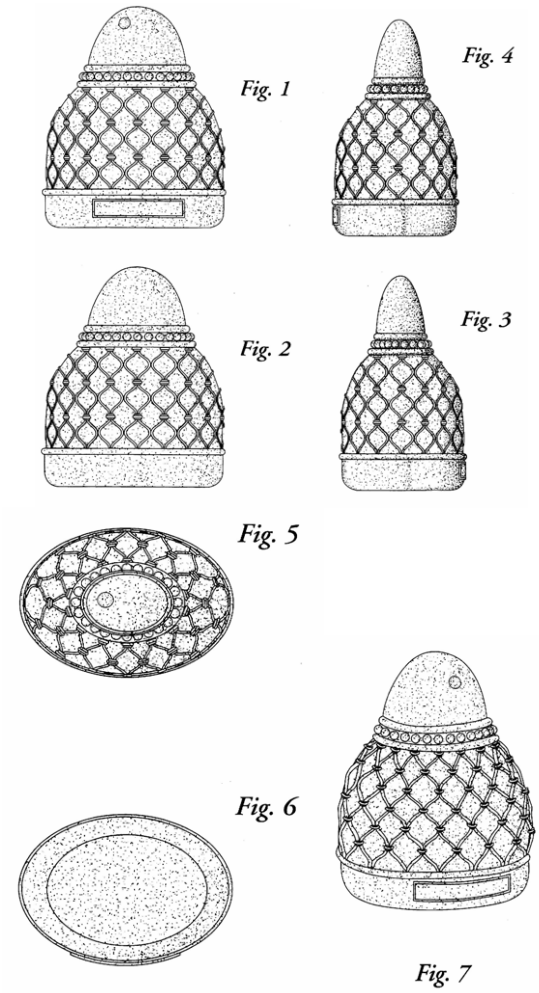

Table 3. Patents and Industrial Designs Requirements Compared

Patents	Industrial Designs
New	New
Useful or industrially applicable	Ornamental
Inventive step, or not an obviousness change in invention	Not an obvious change of design

INDUSTRIAL DESIGNS AND COPYRIGHT

Article 2 of the Berne Convention lists "works of applied art" as examples of literary and artistic works (Berne Article 2(1)) but leaves it to Berne countries "to determine the extent" to which their laws will protect "works of applied art and industrial designs and models, as well as the conditions under which such items will be protected," to the provisions of national law. Article 2 requires only that "[w]orks protected in the country of origin solely as designs and models" must "be entitled in another [Berne country] to such special protection as is granted in that country to designs and models." However, "if no such special protection is granted in that country," Berne Article 2 requires that such works "be protected as artistic works," that is, through copyright.

Whereas patent protection requires that an invention be *new*, that is, that it has not existed before, copyright generally only requires that the work be *original*, that is, not copied or derived from the work of another. TRIPS Article 25.1 requires WTO Members to provide protection for independently created industrial designs that are "new or original," but it leaves it to each WTO Member to decide which standard to apply: novelty, as with patents, or originality, as with copyright, or both, as is typically required for patents.

The choice of whether industrial designs are protected by a special industrial designs law or by copyright makes a difference in the duration and form of protection available. Copyright offers a much longer term than industrial designs law, but the industrial designs law offers protection against the manufacture, sale, or importation of designs that are independently created but substantially similar in appearance to the protected industrial design.

SPECIAL PROVISIONS CONCERNING TEXTILES

TRIPS Article 25.2 requires WTO Members to ensure that the requirements for the protection of textile designs, particularly "in regard to cost, examination or publication, do not unreasonably impair" the designer's ability to secure protection for the design. WTO Members are "free to meet this obligation through industrial design law or through copyright law."

INDUSTRIAL DESIGNS AND PROTECTION OF TRADE DRESS

In some countries, including Egypt, industrial design registration is used to protect trade dress, that is, the packaging of goods. Where trade dress consists merely of surface ornamentation—pictures or words on a package, for example—trade dress

may be protected instead under the law of unfair competition or under copyright law.

An industrial design that relates to the shape of packaging may be protectable as a design, under trademark law, under the law of unfair competition, or by some or all of these forms of protection.

Where trade dress is protected by an industrial design, care should be taken to avoid registering a design that infringes a trademark or trade name. In cases of conflicts, the best approach would be to award all rights to the party with the earliest claim in one of the forms of industrial property. Thus, where an application is filed to register the same trade dress as an industrial design and as a trademark, and the applicants are not the same, the registration should be awarded to the senior applicant or, if there is earlier use of a mark, to the senior user. Care should also be taken to avoid awarding an industrial design registration that infringes the copyright of another party. This issue may arise, for example, when the design reproduces or incorporates an existing drawing, picture, or sculptural work.

In addition, where registration is required, care should be taken to avoid registering as an industrial design an item that whose appearance is dictated by function. For example, the shape or markings of a can might be registrable, and the addition of a pop-top opener would change the appearance of the can. However, but a pop-top opening is a functional feature that might be protected under patent law or as a utility model if eligible, but changes in the appearance of the can due to the use of this functional feature cannot as be the subject of an industrial design registration.

RIGHTS ACCORDED BY INDUSTRIAL DESIGN REGISTRATION

TRIPS Article 26.1 specifies that the owner of a protected industrial design must “have the right to prevent [others] not having the owner's consent from making, selling or importing articles bearing or embodying a design that is a copy, or substantially a copy, of the protected design, when such acts are undertaken for commercial purposes.”

EXCEPTIONS AND LIMITATIONS ON PROTECTION

For industrial designs that satisfy the requirements for protection under TRIPS Article 26.1, exceptions and limitations to their protection should be strictly

limited. TRIPS Article 26.2 permits "limited exceptions to the protection of industrial designs" only where the "exceptions do not unreasonably conflict with the normal exploitation of protected industrial designs and do not unreasonably prejudice the legitimate interests of the owner of the protected design, taking into account the legitimate interests of third parties." Paris Convention Article 5B prohibits the forfeiture of industrial design protection *under any circumstances* (emphasis added). ("The protection of industrial designs shall not, under any circumstance, be subject to any forfeiture, either by reason of failure to work or by reason of the importation of articles corresponding to those which are protected.")

As a matter of public policy, there should be few reasons to limit the protection of industrial designs. A country might, for example, invoke grounds of public order or morality to refuse to register an industrial design that is scandalous or offensive. However, there is no public policy basis comparable to that for patents for a country to limit rights to an industrial design that has been appropriately registered because the industrial design protects only the *appearance* of the item and not its function. While circumstances might justify the grant of a compulsory license to obtain a particular result, it is inconceivable that they would ever justify a compulsory license for items of a particular appearance. For example, a public health emergency might create a pressing need for a particular medicine but would not create a pressing need to have the medicine packaged as pink pills. In reviewing laws of other countries, it is important to note

TERM

TRIPS Article 26.3 requires that industrial designs be registered for a minimum term of 10 years.

PATENT, UTILITY MODEL, OR INDUSTRIAL DESIGN—SELECTING THE PROPER FORM OF PROTECTION

Patents, utility models, and industrial designs all relate to industrial innovations, but each offers different protection. Definitions provide guidance, but the subject is better illustrated by considering some examples.

> **Example 1:** A telephone. The mechanism that causes it to work may be the subject of a patent application, because it relates solely to the useful characteristics of the item. Some features, such as the electrical circuit that allows the computer to redial or display a number, could also be the subject of a patent. The shape of the telephone, the layout of buttons or the placement of

the screen on which the numbers are displayed, could be the subject of an industrial design registration because they relate to the appearance of the item. That is, a telephone that is rectangular performs the same function as a telephone that is oval, and a telephone that has a black case performs the same function as one with a clear case, but each gives a different appearance. Attaching a pencil and pad of paper to the case of the telephone would be a useful rather than a decorative feature, and therefore not an appropriate subject for an industrial design registration. However, since a pencil is frequently used in connection with a telephone, attaching it to the telephone would likely be an obvious improvement over the existing art, and the innovation—which might be novel and which would be very useful—would be unpatentable because it lacked inventive step. However, that innovation might be an appropriate subject for a utility model registration.

Example 2: An item of food, such as a pastry. Both the recipe—a process for making a useful item—and the item itself—a composition of matter, or the product of a novel process for making the item—could be the subject of a patent, provided that it met other conditions of patentability, such as inventive step. Inventive step might exist if the pastry were made according to a process that gave it particular (unexpected) qualities, such as longer shelf life, a different texture, or a particular taste. In some cases, inventive step might also exist if the process gave the item a different and unexpected appearance. However, inventive step ordinarily does not exist if the only new property is shape or surface ornamentation. However, the same pastry shaped or decorated to give a particular appearance might be the subject of an industrial design, and a mold or pan in which the pastry was prepared might be the subject of a utility model.

It may not be known before filing whether an invention meets the requirements of novelty and inventive step and so could be patentable, or whether it would be advisable for an applicant to apply to register the new items as an industrial design or utility model. It is therefore helpful to inventors if a country's industrial property laws permit an applicant to convert an application for a patent to an application for an industrial design or utility model registration, or to convert an application for an industrial design or utility model registration to an application for a patent, or to convert an application for a utility model registration to an application for an industrial design registration or patent, in appropriate cases, and to provide that the applicant will not lose novelty for the later, that is, converted,

application because of having initially filed an application for a different type of protection.

INTERNATIONAL PROTECTION OF INDUSTRIAL DESIGNS

A person who wishes to protect an industrial design in more than one country must file applications in each country where protection is desired and meet the legal requirements of each country. This process is facilitated by claiming priority as provided under the Paris Convention. It is further facilitated by an international system of protection available under the Hague Agreement Concerning the International Registration of Industrial Designs (Hague Agreement).

INTERNATIONAL PROTECTION UNDER THE HAGUE AGREEMENT

For designers who are able to claim the benefits of the Hague Agreement, the process of filing abroad is facilitated considerably. Access to the benefits of the Hague Agreement is based on the applicant's nationality, domicile, or real and effective industrial or commercial establishment in a Hague contracting party or, where the contracting party is an intergovernmental organization, in its member state.[104]

The international application is filed with the International Bureau (WIPO) or, in some cases, in the industrial property office of the Contracting Party through which the applicant has access to the Hague Agreement.[105] The International Bureau conducts an examination for formalities only and, unless it has been requested to defer publication, publishes applications that meet the formal requirements online in the *International Designs Bulletin*.

Each industrial property office that has been designated by the applicant then conducts a substantive examination in accordance with that office's own national legislation and notifies the International Bureau of any refusal. If no refusal is

---

[104] Under the 1999 Act, access may also be based on habitual residence in one of the Contracting Parties. *Guide to the International Registration of Industrial Designs* 02.05, WIPO, http://www.wipo.int/export/sites/www/hague/en/guide/pdf/hague_guide_part_a.pdf, accessed March 13, 2009.

[105] "An international application is normally sent directly to the International Bureau by the applicant. Under the 1960 Act, however, a Contracting Party is entitled to require that, where it is considered to be the State of origin, the application be filed through its national Office." *Op. cit. Guide* at 02.13.

communicated, the protection is granted and has the same effect as a grant of protection in each of the contracting parties where the international application becomes effective.[106] International registrations can be renewed in five-year increments up to the maximum term provided in each contracting party.[107] This system has a number of advantages, including the ability to file a single application and designate several countries where protection is desired, the need to meet only a single set of requirements and respond to a single examination for formalities, and simpler management of the industrial design by having to meet only a single set of procedures for renewals or to record a change of name or transfer of ownership.

[106] *Op. cit. Guide* at 02.14–02.22.

[107] *Op. cit. Guide* at 02.23.

7 PLANT VARIETY PROTECTION

New plant varieties are of interest for a number of practical reasons. Some varieties offer an increased yield. Others are more suited to particular growing conditions, for example, requiring less water or tolerating salt in groundwater. Still others offer greater resistance to disease or higher nutritional value or produce more attractive fruits, foliage, or flowers.

The development of a new plant requires an investment of time and resources, yet anyone who gains access to the plant's propagating material can reproduce the plant in quantity. Often, a plant's main products are also its propagating material. In these instances, selling the harvested product—an ear of corn or pod of peas—is equivalent to selling a factory to produce more of the same.

For these reasons, public policy favors an effective means of protection for new plant varieties. Plant variety protection (also referred to as plant breeders' rights) should provide the developer of a new variety of plant the right to control certain uses of the variety, for example, to prevent others from reproducing the variety, or selling or marketing its propagating material or its produce.

There are two main approaches to the protection of plant varieties. One is through the patent system. The other is a *sui generis* form of protection sometimes called breeder's rights and sometimes merely referred to as plant variety protection, which is discussed in greater detail below.

In general, the patent system can be used to protect plants developed through genetic engineering. However, the patent system is of limited use in protecting new varieties developed through traditional methods of breeding because the predictive nature of genetics makes it difficult or impossible to establish the required degree of inventive step to obtain a patent. Because of this, and to promote the development of a range of new types of plants, some countries have established a special form of patent protection for plants, with different requirements for protection. In the United States, for example, a plant patent is available for a plant that is new, asexually reproduced, and distinct from other varieties, including cultivated sports, mutants, hybrids, and newly found seedlings, but not including a tuber propagated plant or a plant found in an uncultivated state.

WHAT IS A NEW PLANT VARIETY?

Protection for new plant varieties encompasses not only plants that are bred but also those that are discovered and developed. This approach offers the same incentive to those who discover a plant, recognize its qualities, and develop it, as to those who set out to develop a plant with particular characteristics.[108]

The term novelty also has a different meaning from the use of the same term in connection with patents or industrial designs. Unlike the situation for patents and industrial designs, where novelty means that the thing is not previously known, for purposes of plant variety protection, a plant variety is novel if it has not been previously commercially exploited.

Thus, unless otherwise defined in a country's law, a new plant variety is one that has been bred, or discovered and developed, and has not been commercially exploited.

REQUIREMENTS FOR PLANT VARIETY PROTECTION

WTO Members must protect new plant varieties either "by patents or by an effective *sui generis* system" or by a combination of such systems.[109] While the TRIPS Agreement contains detailed requirements for the protection that must be accorded for patents, copyright, and industrial designs, it contains no further guidance as to what constitutes an effective system of protection of plant varieties.

The best source of such information, and the international norm for the protection of plant varieties, is the International Convention for the Protection of New Varieties of Plants (1991 Act), generally referred to by its French acronym *UPOV*.[110] UPOV is the leading international agreement in field of protection for plant varieties. It contains the most comprehensive set of conditions for the protection of plant varieties, specifies certain mandatory exceptions, and provides an international system of protection for new plant varieties.

---

[108] U.S. law permits the grant of a plant patent to a newly found seedling but not to a plant found in an uncultivated state.

[109] TRIPS Article 27.3(b).

[110] Union pour la Protection des Obtentions Végétales.

UPOV provides a set of rights similar to those established for inventions and marks under the Paris Convention for the Protection of Industrial Property, for example, the right of priority and the right to national treatment, but the agreement contains a considerably more detailed set of requirements. UPOV membership does not provide for a centralized filing of applications like that available under the Patent Cooperation Treaty or Hague Agreement. Membership in UPOV is available to countries and intergovernmental organizations with legislation that is consistent with the provisions of UPOV.

CONDITIONS FOR PROTECTION OF PLANTS

Plant variety protection is obtained in UPOV countries by filing an application with the plant variety protection office designated by national law. UPOV Article 10 provides that the breeder has the right to choose the country in which to apply first and the right to file in other countries without waiting for the grant of a breeder's right in the country where the application was first filed. Furthermore, the breeder's right cannot be refused or limited in duration "on the ground that protection for the same variety has not been applied for, or has expired or been refused, in any other State or intergovernmental organization." (UPOV Article 10)

UPOV Article 5 provides that varieties are entitled to be protected if they are new, distinct, uniform, and stable. UPOV Article 5.2 provides that the grant of the breeder's right cannot "be subject to any further or different conditions," provided that the variety has an appropriate denomination (name) and the applicant complies with formalities and pays the required fees.

NOVELTY

Under UPOV Article 6, a variety is *new* if "propagating or harvested material of the variety has not been sold or otherwise disposed of to others, by or with the consent of the breeder, for purposes of exploitation of the variety"

- Domestically within one year before the date of filing a plant variety protection application *or*
- In another country within four years from the date of filing or, for vines and trees, more than six years before filing *or*
- Earlier if the country is extending protection to a new genus or species for the first time and exercises this option under UPOV.

DISTINCTNESS

A plant variety is *distinct* "if it is clearly distinguishable from any other variety whose existence is a matter of common knowledge" at the time the application for plant variety protection is filed. (UPOV Article 7) Filing an application for plant variety protection in any country makes that variety "common knowledge" throughout the world, as does applying to enter the variety in an official register of varieties. In both cases, the pertinent varieties become common knowledge only if the application actually leads to granting of plant variety protection or, where the request was to enter a variety in an official register, if that variety is actually entered in the register.

UNIFORMITY

A variety is considered *uniform* if "it is sufficiently uniform in its relevant characteristics," taking into account "the variation that may be expected from the particular features of its propagation." (UPOV Article 8) Absolute uniformity, such as would be expected from mass-produced items, is not required and probably could not be achieved. The features that must be uniform are, in practice, those necessary to describe the variety and distinguish it from other varieties.

STABILITY

Finally, a variety is considered *stable* "if its relevant characteristics remain unchanged after repeated propagation or, in the case of a particular cycle of propagation, at the end of each such cycle." (UPOV Article 9)

EXAMINATION

UPOV Article 12 requires that each application be examined for compliance with the conditions for protection. "In the course of examination, the [competent plant variety] authority may grow the variety or carry out other necessary tests, cause the growing of the variety or the carrying out of other necessary tests, or take into account the results of growing tests or other trials which have already been carried out. For the purposes of examination, the authority may require the breeder to furnish all the necessary information, documents or material."

RIGHT OF PRIORITY

UPOV Article 11 provides a 12-month right of priority, "computed from the date of filing the first application" but excluding the day of filing that application. No

act done during the priority period, such as filing an application or publication or "use of the variety that is the subject of the application," can constitute a ground for rejection of the application or "give rise to a third-party right."

To take advantage of the priority right, the breeder must "claim the priority of the first application" in the subsequent application. The breeder may be required to furnish a copy of the first application documents, "certified as a true copy" by the office where it was filed, "and samples or other evidence" that both applications concern the same variety. The breeder must have at least three months to furnish the priority materials and two years after expiration of the priority period to furnish any information, document, or material needed for examination.

PROTECTION OF PLANT VARIETIES

Plant variety protection gives the breeder the right to control the use of propagating material. UPOV Article 14 provides that the breeder's authorization is required for any of the following uses of propagating material of the protected variety:

(i) production or reproduction (multiplication)

(ii) conditioning for the purpose of propagation,

(iii) offering for sale,

(iv) selling or other marketing,

(v) exporting,

(vi) importing,

(vii) stocking for any of the purposes mentioned above.

"The breeder may make his [or her] authorization subject to conditions and limitations." Subject to the exceptions and exhaustion provisions mentioned below, the breeder's right extends to "harvested material, including entire plants and parts of plants, obtained through the unauthorized use of propagating material of the protected variety … unless the breeder has had reasonable opportunity to exercise his [or her] right in relation to" that propagating material.

In certain cases, the protection of a new variety also extends to other varieties. UPOV Article 14(5) provides that protection extends to

(i) varieties which are essentially derived from the protected variety, where the protected variety is not itself an essentially derived variety,

(ii) varieties which are not clearly distinguishable … from the protected variety [applying the same principles used to determine distinctness], and

(iii) varieties whose production requires the repeated use of the protected variety.

Without such a scope, the rights of the breeder would be of little importance.

ESSENTIALLY DERIVED VARIETIES

UPOV Article 14(5)(b) defines an *essentially derived variety* in relationship to another variety (the *initial variety*).

A variety shall be deemed to be essentially derived from another variety ("the initial variety") when

(i) [the variety] is predominantly derived from the initial variety, or from a variety that is itself predominantly derived from the initial variety, while retaining the expression of the essential characteristics that result from the genotype or combination of genotypes of the initial variety,

(ii) it is clearly distinguishable from the initial variety and

(iii) except for the differences which result from the act of derivation, it conforms to the initial variety in the expression of the essential characteristics that result from the genotype or combination of genotypes of the initial variety.

TERM

UPOV Article 19 requires that protection of plant varieties must be granted for a fixed period of time. This period must be not less than 20 years from the date protection is granted, or in the case of trees and vines, not less than 25 years from the date on which protection is granted.

UPOV Article 13 requires provisional protection, that is, protection of the breeder's rights during the period between either the date of filing the application or the date of publication of the application for the grant of a breeder's right and date on which the breeder's right is granted. The breeder is entitled at least to equitable remuneration for any of the acts during that period that would require the breeder's authorization if performed after the right is granted. UPOV contracting

parties may make this protection apply only "to persons whom the breeder has notified of the filing of the application."

COMPULSORY EXCEPTIONS

Breeders' rights are not absolute. UPOV requires certain compulsory exceptions, that is, exceptions to protection that must be provided for in the laws of UPOV members. UPOV Article 15 requires that the plant breeder's right must not extend to acts done (1) "privately and for non-commercial purposes," (2) "for experimental purposes," and (3) "for the purpose of breeding other varieties."

OPTIONAL EXCEPTION

UPOV Article 15.2 also permits UPOV contracting parties to adopt an exception permitting a farmer to use the products of his or her own harvest for propagating purposes on the farmer's own holdings. This exception must be exercised within reasonable limits and must be subject to provisions safeguarding the legitimate interests of the breeder. Note that this right is limited to the use of the product of the farmer's own harvest obtained by planting on the farmer's own holdings. The exception is applicable to a protected variety or to a variety that is essentially derived from or not distinguishable from the protected variety.

EXHAUSTION

The UPOV Convention provides for an exhaustion of the breeder's right. Under Article 16, this exhaustion doctrine applies to "propagating material of any kind; harvested material, including entire plants and parts of plants; and any product made directly from the harvested material."

The breeder's right does not extend to any acts concerning any of these materials if the material has been sold or otherwise marketed by the breeder, or with the breeder's consent, within the territory of a UPOV member, except in two situations:

- If the acts "involve further propagation of the variety in question" or
- If the acts "involve an export of material of the variety, which enables the propagation of the variety, into a country which does not protect varieties of the plant genus or species to which the variety belongs, except where the exported material is for final consumption purposes." (UPOV Article 16(1))

Example 1: A farmer breeds a new variety of maize, which he grows. He sells the kernels for use as food. The farmer learns that the kernels have been resold at a higher price. The farmer cannot use his breeder's rights to prevent subsequent sales, or to claim a portion of the proceeds of those sales, where the kernels are sold for food, because those rights are exhausted by the breeder's initial sale of the kernels. That is, the breeder has had his benefit from the breeder's right by receiving the benefit from that first sale. The farmer can use the breeder's right to prevent a resale or use of the kernels to grow additional maize of the protected variety, and to prevent the exportation of the kernels to a country that does not protect varieties of the same genus or species of the protected variety of maize, because those rights are not exhausted by the sale of the kernels.

Example 2: The farmer in the above example sells kernels of the maize to a distributor but later learns that a neighbor has taken kernels from the farmer's field, without permission, and used them to grow more of the protected variety. The neighbor grinds the stalks and sells them as animal food. The farmer's rights are not exhausted with respect to the animal food, and he should have the legal ability to prevent the growing of the protected maize, to seize the harvested material and any products made from it, and to have money damages equivalent to the farmer's losses, the neighbor's profits, or both.

RESTRICTIONS ON THE BREEDER'S RIGHT

Except as specifically permitted, UPOV Article 17 prohibits any further restrictions on the breeder's right except for reasons of public interest. If a restriction on the breeder's right "has the effect of authorizing [another person] to perform any of the acts requiring the breeder's authorization," UPOV Article 17 requires the government to "take all measures necessary to ensure that the breeder receives equitable remuneration."

PLANT VARIETY PROTECTION COMPARED WITH PATENT PROTECTION

The grant of plant variety protection is confirmed by issuing a document. In some countries, this is described as a certificate; in others, as a patent for the plant variety. Whether or not the certificate is called a patent, plant variety protection should be available for all species and genera if they are new, distinct, uniform, and stable.

This form of protection should not be confused with a patent for an invention, which should be available for inventions that are new, useful, and contain an inventive step. Patents for inventions may be available for plants if they are not excluded by national law. Plant variety protection should also not be confused with special plant patents available in some countries, such as the Republic of Korea and the United States, for asexually reproduced plants.

Patents must be available for a minimum term of twenty years from filing. Plant variety protection offers a minimum term of twenty years from grant, or twenty-five years in the case of trees and vines.

Patents and plant variety protection offer a different set of legal rights. Patents offer the owner the exclusive right to make, use, sell, offer for sale, or import for those purposes a patented product, and the right to use a patented process and to make, use, sell, offer for sale, or import for those purposes the direct product of the patented process. Plant variety protection offers the owner the exclusive right to produce or reproduce propagating material or condition it for the purpose of propagation, and the right to offer for sale, sell, or otherwise market, export, import, or stock for those purposes the propagating material. Exceptions and limitations on the rights of the plant variety owner are much broader for plant varieties than the exceptions and limitations on protection that are permitted for patents.

CHOOSING THE RIGHT FORM OF PROTECTION FOR AGRICULTURAL INNOVATIONS

Technological advances in agriculture are not limited to plants. Table 4 suggests the likeliest form of protection[111] for most technological advances in the field of agriculture.

Table 4. Protection for Agricultural Innovations

Types of Technological Development	Form of Protection that May Apply
Plant varieties and animal breeds developed through breeding programs	Breeders' rights

[111] Not all forms of protection are available in all countries. Some countries exclude plants and animals from the protection of the patent system. Breeders' rights for animals, other than microbiological organisms, are available under the domestic laws of a few countries.

Methods of cultivation	Patent
Agricultural equipment	Patent
Newly discovered and developed genera and species	Breeders' rights
Agricultural chemicals	Patent
Genetically engineered plants and animals	Patent, Breeders' rights

OTHER ISSUES

See the discussions below on special issues relating to patents, plant varieties and the Convention on Biodiversity.

8 SPECIAL ISSUES RELATING TO PUBLIC HEALTH AND THE ENVIRONMENT

Like other branches of law, intellectual property is influenced by the social, economic, and political context in which it exists. Legislation is drafted on the basis of experience, and international agreements are negotiated to reflect the evolving needs of the contracting parties to the relevant international agreements. Dramatic examples of this process can be seen in the development of new laws and international agreements to address widespread copyright piracy and trademark counterfeiting that had been made possible, or at least made easier, by the development of new technologies and the globalization of international trade, together with efforts to reconcile intellectual property interests with pressing public health needs, in particular, the need for pharmaceuticals to combat HIV/AIDS.

Intellectual property exists within a broader legal context that includes civil, criminal, and administrative procedures that are usually the same as those applied in other areas of the law. In addition, some types of activities are subject to regulation or other legal provisions in addition to those related to intellectual property, sometimes giving rise to competing or overlapping requirements. Special consideration may be given to the relationship between intellectual property and public health or the environment.

TRIPS AND PUBLIC HEALTH

In negotiations leading up to adoption of the WTO Agreement, concern was expressed that the exercise of patent rights might prevent countries from taking action to address issues of pressing importance. One response to this concern was the inclusion of TRIPS Article 8, which specifically allows WTO Members to "adopt measures necessary to protect public health and nutrition, and to promote the public interest in sectors of vital importance to their socio-economic and technological development, provided that such measures are consistent with the provisions" of the TRIPS Agreement (TRIPS Article 8.1).

The TRIPS Agreement also recognized the need for limited exceptions to patentability (TRIPS Article 27)[112] and exceptions to patent rights (TRIPS Article 30)[113] and addressed the possibility that a government could authorize the exploitation of a patented invention without the authorization of the patent holder (TRIPS Article 31).

Finally, TRIPS prohibited subject matter limitations for patents but provided for transitional periods for full implementation of the TRIPS Agreement. Recognizing that developing countries might face greater difficulty in achieving full implementation of some provisions, particularly those relating to patentability of inventions in all fields of technology, TRIPS provided for a longer transitional period for developing countries.

SUBSEQUENT ACTIONS RELATING TO TRIPS AND PUBLIC HEALTH

Subsequent to the adoption of the TRIPS Agreement, the WTO again considered issues related to intellectual property and public health on several occasions: in 2001, at the Doha Ministerial;[114] in 2002, by the TRIPS Council; in 2003, by the General Council; in 2005, by the General Council and by the Hong Kong Ministerial; and in 2008, by the General Council.[115] These discussions have

---

[112] TRIPS Article 27.1 requires that "patents shall be available and patent rights enjoyable without discrimination as to … the field of technology and whether products are imported or locally produced." TRIPS Article 27.2 allows WTO Members to "exclude from patentability inventions, the prevention within their territory of the commercial exploitation of which is necessary to protect *ordre public* or morality, including to protect human, animal or plant life or health or to avoid serious prejudice to the environment, provided that such exclusion is not made merely because the exploitation is prohibited by their law." Note that the object of such exclusions from patentability must be the exploitation of the invention, that is, that making, using, selling, or importing the invention will cause the harm, not the exercise of exclusive rights. TRIPS Article 27.3 allows WTO Members to exclude from patentability "diagnostic, therapeutic and surgical methods for the treatment of humans or animals," and "plants and animals other than micro-organisms, and essentially biological processes for the production of plants or animals other than non-biological and microbiological processes," although WTO Members must provide for the protection of plant varieties.

[113] TRIPS Article 30 permits WTO Members to "provide limited exceptions to the exclusive rights conferred by a patent, provided that such exceptions do not unreasonably conflict with a normal exploitation of the patent and do not unreasonably prejudice the legitimate interests of the patent owner, taking account of the legitimate interests of third parties."

[114] Fourth WTO Ministerial Conference, Doha, Qatar.

[115] The full text of all of these documents can be accessed on the WTO website, http://www.wto.int.

resulted in a number of legally significant documents and decisions, as summarized below.

DOHA DECLARATION

Paragraph 17, adopted on 14 November 2001, acknowledges the importance of "implementation and interpretation of [the TRIPS Agreement] in a manner supportive of public health, by promoting both access to existing medicines and research and development into new medicines" and announcing the adoption of a separate declaration.

DECLARATION ON THE TRIPS AGREEMENT AND PUBLIC HEALTH

Adopted on 14 November 2001, paragraphs 1-3 of the Declaration acknowledged "the gravity of the public health problems afflicting many developing and least-developed countries, especially those resulting from HIV/AIDS, tuberculosis, malaria and other epidemics," stressed the need for TRIPS to be part of wider action to address those problems, and recognized the importance of intellectual property on the development of new medicines as well as concerns about prices. Paragraph 7 reaffirmed developed-country commitments to provide incentives to encourage technology transfer.

In addition to these general statements of policy, paragraphs 4 to 7 included the following important points related to implementation:

Paragraph 4:

- Agreed "that the TRIPS Agreement does not and should not prevent Members from taking measures to protect public health."
- Affirmed that TRIPS "can and should be interpreted and implemented in a manner supportive of WTO Members' right to protect public health and, in particular, to promote access to medicines for all."
- Affirmed "the right of WTO Members to use, to the full, the provisions in the TRIPS Agreement, which provide flexibility for this purpose."

Paragraph 5 recognized the following flexibilities mentioned in paragraph 4:

> In applying the customary rules of interpretation of public international law, each provision of the TRIPS Agreement shall be read in the light of the object and purpose of the Agreement as expressed, in particular, in its objectives and principles.

> Each Member has the right to grant compulsory licences and the freedom to determine the grounds upon which such licences are granted.
>
> Each Member has the right to determine what constitutes a national emergency or other circumstances of extreme urgency, it being understood that public health crises, including those relating to HIV/AIDS, tuberculosis, malaria and other epidemics, can represent a national emergency or other circumstances of extreme urgency.
>
> The effect of the provisions in the TRIPS Agreement that are relevant to the exhaustion of intellectual property rights is to leave each Member free to establish its own regime for such exhaustion without challenge, subject to the MFN [most-favored nation] and national treatment provisions of [TRIPS] Articles 3 and 4.

Paragraph 6

- Recognized "that WTO Members with insufficient or no manufacturing capacities in the pharmaceutical sector could face difficulties in making effective use of compulsory licensing under the TRIPS Agreement."
- Instructed the TRIPS Council to find an expeditious solution to this problem and to report to the General Council before the end of 2002.

Paragraph 7

- Extended to 1 January 2016 the time for least-developed country Members to implement or apply the patent or undisclosed information provisions of TRIPS Article 116 with respect to pharmaceutical products, "without prejudice to the right of least-developed country members to seek other extensions of the transition periods," and instructed the TRIPS Council to take action pursuant to TRIPS Article 66.1 to give effect to this decision.

[116] Sections 5 and 7 of Part II of the TRIPS Agreement.

OTHER CHANGES

Paragraph 7 of the Doha Declaration on the TRIPS Agreement and Public Health was implemented by two subsequent actions of the WTO in 2002:

- Decision on the Extension of the Transition Period under Article 66.1 of the TRIPS Agreement for Least-Developed Country Members for Certain Obligations with Respect to Pharmaceutical Products, adopted by the TRIPS Council on 27 June 2002. Under this Decision, WTO Members that are least-developed countries were not required to protect pharmaceutical patents and test data until 1 January 2016.
- Decision on Least-Developed Country Members. Obligations Under Article 70.9 of the TRIPS Agreement with Respect to Pharmaceutical Products, adopted by the General Council on 8 July 2002. Under this Decision, the obligation to provide exclusive marketing rights for certain pharmaceutical products was deferred until 1 January 2016 for WTO Members that are least-developed countries.

Note that the deadline of paragraph 7 continues to apply to obligations to protect patents and undisclosed information—obligations arising under Sections 5 and 7 of Part II of the TRIPS Agreement—and are not affected by the subsequent decision to extend the transition period for least-developed country Members to 1 July 2021.

Although these measures addressed some concerns for least-developed countries, the question of access to pharmaceutical products remained for countries that lacked manufacturing capacity. This issue was addressed the following year, in the Decision on the Implementation of Paragraph 6 of the Doha Declaration on the TRIPS Agreement and Public Health, adopted by the General Council on 30 August 2003. This Decision noted the existence of exceptional circumstances justifying a waiver of obligations under TRIPS Article 31 (f) and (g)[117] for

[117] TRIPS Article 33 addresses use of patented inventions without authorization of the right holder, also referred to as compulsory licenses. Paragraph (f) requires that "any such use shall be authorized predominantly for the supply of the domestic market of the Member authorizing such use"; paragraph (g) requires that "authorization for such use shall be liable, subject to adequate protection of the legitimate interests of the persons so authorized, to be terminated if and when the circumstances which led to it cease to exist and are unlikely to recur. The competent authority shall have the authority to review, upon motivated request, the continued existence of these circumstances."

pharmaceutical products and adopted measures that, in effect, created rules permitting a two-country compulsory license (discussed below).

In 2005, it was proposed to amend the TRIPS Agreement to provide specifically for this two-country compulsory license (Decision on the Amendment of the TRIPS Agreement, adopted by the General Council, 6 December 2005). The Decision provides for the amendment to come into force after two-thirds of WTO Members have accepted it. To date, a total of 52 Members have accepted the amendment. In 2005, the Hong Kong Ministerial[118] Declaration included a statement[119] reaffirming the importance of the General Council Decision that created the two-party compulsory license procedure and of the proposed amendment of the TRIPS Agreement on that subject. In 2008, the period for WTO Members to accept the proposed amendment was extended from 1 December 2007 to 31 December 2009.

COMPULSORY LICENSES FOR PHARMACEUTICAL PRODUCTS

Companies that own pharmaceutical patents generally need no legal order to manufacture and sell their patented products. This is the purpose for which the companies are organized and the way they generate income. However, because of concerns about the possible misuse of the patent system—for example, to suppress technology or engage in monopolistic practices—or simply to address a patent owner's inability to meet the demand in a particular market, a number of countries have adopted compulsory licensing provisions in their patent laws.

A manufacturer would ordinarily respond to an increased demand by expanding its manufacturing capacity. However, in a public health emergency, a manufacturer might be unable to increase production of a particular patented pharmaceutical product quickly enough to respond to an acute increase in demand. In such situations, another manufacturer may be willing and able to step in and manufacture the product under license (and to obtain any necessary marketing approval). Preferably, this would be accomplished under a voluntary license negotiated between the parties. If a voluntary license is not available, or if the need

[118] Sixth WTO Ministerial Conference, held in Hong Kong, China, 13–18 December 2005.

[119] Hong Kong Ministerial Declaration Paragraph 40.

amounts to an emergency, the Government may invoke the compulsory licensing provisions and grant the license even without the agreement of the patent owner.

For this system to work satisfactorily, there must be a qualified manufacturer in the country facing the emergency. In countries with insufficient or no manufacturing capacity in the pharmaceutical sector, the usual compulsory license arrangement does not offer a practical solution. To address this problem, a new solution was proposed.

TWO-COUNTRY COMPULSORY LICENSES

The Decision on the Implementation of Paragraph 6 of the Doha Declaration on the TRIPS Agreement and Public Health ("Decision on Paragraph 6."), adopted by the WTO General Council on 30 August 2003, created a two-country compulsory license. Under this Decision, a compulsory license can be used to enable an exporting member to manufacture goods for an importing member with insufficient or no manufacturing capacity, based on a national emergency or situation of extreme urgency in the importing member. This situation is considered to justify a limited waiver of the provisions of TRIPS Article 31(f).[120] Where the conditions set forth in the Decision are met, measures taken in conformity with the waivers are protected against challenge as non-violation complaints.[121]

The two-country compulsory license requires notifications by both the exporting and eligible importing members. The license must also be subject to restrictions to prevent abuse, including notification to the TRIPS Council and labeling and marking the product to prevent diversion to another country, and provision must be made for remuneration of the patent holder.

This two-country compulsory license is available for any pharmaceutical product. The term "pharmaceutical product" encompasses patented products and products manufactured through a patented process, as well as active ingredients necessary for manufacture of the product and diagnostic kits needed for use of the product, where the product is needed to address the public health problems recognized in

---

[120] TRIPS Article 31(f) requires that use under a compulsory license must be "authorized predominantly for the supply of the domestic market of the Member authorizing such use."

[121] Non-violation complaints are provided for under GATT 1994, Article XXIII, subparagraphs 1(b) and 1(c).

paragraph 1 of the Doha Declaration on the TRIPS Agreement and Public Health.[122] The compulsory license can apply to one or more pharmaceutical products.

Any country can be an exporting member. An exporting member is a WTO Member that will produce pharmaceutical products for, and export them to, an eligible importing member.

Every least-developed country WTO Member is deemed to be an "eligible importing member."[123] However, any WTO Member can declare itself to be an eligible importing member by notifying the TRIPS Council that it intends to use the system as an importer, and no approval is required for this notification to be effective.

To be an eligible importing member, a WTO Member that is not a least-developed country must establish its eligibility by showing either that the Member has no manufacturing capacity in the pharmaceutical sector, or where the Member has some manufacturing capacity in the pharmaceutical sector, by showing that it has examined this capacity and found that, excluding any capacity owned or controlled by the patent owner, it is currently insufficient for the purposes of meeting its needs. When it is established that pharmaceutical manufacturing capacity has become sufficient to meet the Member's needs, the system created under the Decision on Paragraph 6 no longer applies to that Member.[124]

A WTO Member may notify at any time that it will use the system in whole or in a limited way, for example, only in case of a national emergency or other circumstances of extreme urgency. Twenty-three developed-country Members have notified the WTO that "they will not use the system as importing

---

[122] Doha Agreement on the TRIPS Agreement and Public Health, paragraph 1: "We recognize the gravity of the public health problems afflicting many developing and least-developed countries, especially those resulting from HIV/AIDS, tuberculosis, malaria and other epidemics."

[123] "All least-developed country Members are deemed to have insufficient or no manufacturing capacities in the pharmaceutical sector." Annex to the Decision of the General Council of 30 August 2003 (hereafter "Decision on Paragraph 6), WT/L/540 and Corr.1, available at http://www.wto.int/english/tratop_e/trips_e/implem_para6_e.htm, accessed August 1, 2014.

[124] Annex to the Decision on Paragraph 6.

Members,[125] [while others] have stated that, if they used the system, it would be in no more than situations of national emergency or other circumstances of extreme urgency."

Once Members have decided to create the two-party compulsory license, the Decision on Paragraph 6 requires that the eligible importing member must make a notification[126] to the TRIPS Council that

> (i) specifies the names and expected quantities of the product(s) needed;
>
> (ii) confirms that the eligible importing Member in question, other than a least developed country Member, has established that it has insufficient or no manufacturing capacities in the pharmaceutical sector for the product(s) in question in one of the ways set out in the Annex to [the Decision on Paragraph 6]; and
>
> (iii) confirms that, where a pharmaceutical product is patented in its territory, it has granted or intends to grant a compulsory license in accordance with [TRIPS] Article 31 and the provisions of [the Decision on Paragraph 6]. (footnotes omitted)

Moreover, the "compulsory license issued by the exporting member must contain the following conditions:

> (i) only the amount necessary to meet the needs of the eligible importing Member(s) may be manufactured under the license, and the entirety of this production shall be exported to the Member(s) which has notified its needs to the TRIPS Council;
>
> (ii) products under the license shall be clearly identified as being produced under the system set out in [the Decision on Paragraph

---

[125] Australia, Austria, Belgium, Canada, Denmark, Finland, France, Germany, Greece, Iceland, Ireland, Italy, Japan, Luxembourg, Netherlands, New Zealand, Norway, Portugal, Spain, Sweden, Switzerland, United Kingdom, and the United States of America: http://www.wto.int/english/tratop_e/trips_e/implem_para6_e.htm#fntext3, accessed March 24, 2009.

[126] Joint notifications providing the information required under this subparagraph may be made by the regional organizations referred to in paragraph 6 of this Decision on behalf of eligible importing Members using the system that are parties to those organizations, with the agreement of those parties.

6] through specific labeling or marking. Suppliers should distinguish such products through special packaging and/or special coloring/shaping of the products themselves, provided that such distinction is feasible and does not have a significant impact on price; and

(iii) before shipment begins, the licensee shall post on a website the following information:

— the quantities being supplied to each destination as referred to indent (i) above; and

— the distinguishing features of the product(s) referred to in indent (ii) above.

To facilitate the website posting required above, the licensee may use its own website or, with the assistance of the WTO Secretariat, the page on the WTO website dedicated to the Decision on Paragraph 6.

Once the license is granted, the exporting member must notify the TRIPS Council of the grant of the license, including the conditions attached to it. The notification need not be approved but will be made available publicly by the WTO Secretariat through a page on the WTO website dedicated to the Decision on Paragraph 6. The notification must include the name and address of the licensee, the product(s) for which the license has been granted, the quantity(ies) for which it has been granted, the country or countries to which the product (or products) is/are to be supplied, the duration of the license, and the address of the website where the licensee will post information on the quantities being supplied and the distinguishing features of the products.

The two-country compulsory license requires, in effect, the grant of two compulsory licenses, one in the importing country and one in the exporting country. Under the Decision on Paragraph 6, the compulsory license granted by the exporting member requires the payment of adequate remuneration as provided in TRIPS Article 31(h). This remuneration is to be paid in the exporting member, "taking into account the economic value to the importing Member of the use that has been authorized in the exporting Member." Where a compulsory license is granted for the same products in the eligible importing member, the obligation of the importing member to pay remuneration under TRIPS Article 31(h) will be waived for products for which remuneration was paid in the exporting member.

The notification and marking provisions of this system have been criticized by some. However, the system as a whole achieves a balance that is a goal of the TRIPS Agreement. In addition, these requirements serve the important purpose of ensuring that products imported under the two-country compulsory license are in fact used for the public health purposes underlying their importation. Distinctive marking and labeling of the compulsorily licensed products is intended to frustrate attempts to divert them from areas of high need but limited means, to countries with less need but where the products may be sold at a higher price. These requirements also help ensure that manufacturers in exporting countries do not exceed manufacturing and sales authorized by the compulsory license, to the detriment of the patent holder.

Under the Decision, eligible importing members are required to "take reasonable measures within their means, proportionate to their administrative capacities and to the risk of trade diversion, to prevent re-exportation of the products that have actually been imported into their territories under the system." Where an eligible importing member that is a developing country or a least-developed country experiences difficulty in implementing such measures, developed country Members are to "provide, on request and on mutually agreed terms and conditions, technical and financial cooperation to facilitate" implementation of the provisions to prevent diversion or re-exportation. In addition, all Members are required to "ensure the availability of effective legal means to prevent the importation into, and sale in, their territories of products produced under the system" set out in the Decision on Paragraph 6 and improperly diverted to their markets.

The Decision on Paragraph 6 specifically provides for the possibility of using the two-country solution on a regional basis. Regional cooperation is encouraged to permit countries to use economies of scale to enhance their purchasing power for pharmaceutical products and to facilitate local production. Regional cooperation is provided where the proposed importing members are parties to a regional trade agreement where at least half of the Members are developed countries. In this situation, the obligation of a WTO Member under TRIPS Article 31(f) (predominant use to satisfy the local market) is "waived to the extent necessary to enable a pharmaceutical product produced or imported under a compulsory license in that Member to be exported to the markets of other developing or least developed country parties to the regional trade agreement that share the health problem" that is the basis for the compulsory license.

Until an amendment to the TRIPS Agreement is adopted, the waiver described above remains in effect. Under this provision, a country that wishes to be an "eligible importing member" must make advance notification to the WTO. This notification may be made at any time. This requirement does not apply to least-developed countries. As of July 2014, no notifications have been made, although some countries have amended their laws to permit exports to developing countries under compulsory license.

A different notification is required each time an eligible Member imports under this system. In this case, the notification must include the details of the transaction, as described above. As of July 2014, there has been only one such notification by an exporting member (Canada in 2007) and only one notification by an importing member (Rwanda in 2007).

PLANT VARIETIES, PATENTS, AND BIODIVERSITY

The Doha Ministerial Declaration instructed the TRIPS Council to examine the relationship between TRIPS Article 27.3(b), which permits WTO Members to exclude patents for plants and animals other than microorganisms, and the Convention on Biological Diversity (CBD), the protection of traditional knowledge and folklore, and other relevant new developments.

The Convention on Biological Diversity is an international agreement with the objectives that include the conservation of biological diversity, that is, the variability among living organisms, and "the fair and equitable sharing of the benefits arising out of the utilization of genetic resources, including by appropriate access to genetic resources and by appropriate transfer of relevant technologies, taking into account all rights over those resources and to technologies…."[127] In particular, discussions on the equitable sharing of benefits have focused on such issues as bioprospecting, the taking and use of biological resources or traditional knowledge without "informed consent," and the granting of patents for inventions that incorporate biological resources from the territories of the countries from which the resources were obtained without benefit sharing.

Some CBD member states object to patents for inventions that incorporate their biological resources. They argue that there is a conflict between the TRIPS

[127] CBD Articles 1 and 2.

Agreement, which creates exclusive rights in living organisms, and the equitable sharing of benefits called for by the CBD. Responding to this concern, some countries have proposed or adopted measures requiring patent applicants to disclose the source and country of origin of biological resources and traditional knowledge used in the invention, submit evidence that the materials were obtained with prior informed consent through approval of authorities under the relevant national regime, and submit evidence of fair and equitable benefit-sharing under the relevant national regime. These requirements are burdensome and sometimes impossible to achieve since patent applicants may not have access to this information and because biological samples may have multiple sources. This is particularly true with regard to plant breeding, where a new species may have many genetic ancestors.

In any event, linking patentability or plant variety protection to requirements to disclose the origin of biological materials creates unnecessary conflicts with the intellectual property system and is likely to yield results other than those intended. For WTO Members, the requirements for patentability are set forth in TRIPS Article 27 (novelty, inventive step, and industrial applicability) and Article 29 (clear and complete disclosure, and the options of requiring disclosure of the best mode and of providing information on corresponding foreign applications and grants). Making disclosure of the source of biological materials a requirement for patentability appears to exceed the flexibility provided under the TRIPS Agreement. This fact is implicit in efforts to amend TRIPS Article 27 to provide a further exception to patentability for "products or processes which directly or indirectly include genetic resources or traditional knowledge obtained" without prior informed consent and benefit sharing.

For plant varieties, the international system of protection is clearly set forth in UPOV Article 5, which sets the conditions for protection—that the species be new, distinct, uniform and stable—and specifically provides that "The grant of the breeder's right shall not be subject to any further or different conditions" other than designation by denomination, compliance with formalities, and payment of required fees.

Moreover, linking the disclosure of the source of biological materials or traditional knowledge to intellectual property provisions may not achieve the desired result of equitable sharing of resources. Intellectual property provisions are subject to national treatment requirements for WTO Members, Paris Convention countries, and UPOV contracting parties. A country may wish to impose limitations on

foreign exploitation of its biological resources or traditional knowledge but may not wish to impose the same limitations on its own nationals. To the contrary, it may wish to encourage the development and commercialization of its indigenous resources in a way that retains the benefits, or a significant portion of them, for its own economy.

This poses a challenge for intellectual property practitioners: How can a country use the intellectual property system to benefit its own population, and achieve the equitable sharing of benefits and other aims of the CBD, while still observing the national treatment requirements that are features of the relevant international agreements on intellectual property?

One solution is to shift some of the focus on this issue from legislation to implementation. National treatment requirements apply to the countries and organizations that are party to international agreements, not to the individuals, companies, or other business entities that are the nationals of those countries.

Thus, a community with traditional knowledge that a particular plant has certain medicinal properties could take steps to protect and exploit that knowledge. While patent protection would most likely be foreclosed because of loss of novelty, it would be useful to evaluate the availability of other forms of intellectual property protection. Protection might be available for the plant as a new variety if it had not been previously commercialized. Protection would also be available for a breeder who domesticates a wild breed. Traditional knowledge might be subject to protection as undisclosed information, provided it meets the three-part test of TRIPS Article 39 of being 1) “secret in the sense that it is not, as a body or in the precise configuration and assembly of its components, generally known among or readily accessible to persons within the circles that normally deal with the kind of information in question;” 2) it “has commercial value because it is secret;” and 3) it “has been subject to reasonable steps under the circumstances, by the person lawfully in control of the information, to keep it secret.” Such situations could give rise to successful business ventures.

Another frequently cited issue involves bioprospecting in which a foreign interest, such as a pharmaceutical company, searches for plants or other biological materials with medicinal properties and uses them to develop new and potentially patentable inventions. In these circumstances, the country that was the source of

the materials may not receive any financial benefit and, depending on the terms of any resulting patent,[128] may be foreclosed from using its own traditional knowledge unless it takes the steps necessary to invalidate the patent.

Although the source country may wish to prevent or limit bioprospecting by foreign interests, or to ensure that it obtains a portion of the revenue from any resulting technology, it may not wish to stifle similar research by its own scientists. In this situation, it may be preferable to make use of the country's ability to control its resources through a system that is not part of the intellectual property laws, and to use the intellectual property system as a means of ensuring the equitable distribution of benefits. This could be accomplished, for example, by setting up a system for granting access to the country's resources through an appropriate governmental or non-governmental organization (not through an intellectual property office) and including contractual provisions on intellectual property as part of that system. Such an approach would most likely avoid the national treatment issues that arise when countries attempt to use the intellectual property system to regulate access to biological resources.

TRIPS AND LIMITATIONS ON SUBJECT MATTER PROTECTION FOR PATENTS

The TRIPS Agreement requires all WTO Members to offer patent protection for inventions in all fields of technology. A number of Members, including Egypt, previously had patent laws that excluded patentability for certain types of inventions or limited the term of protection available for those inventions.[129] These

[128] Presumably, the traditional knowledge would comprise part of the prior art and could, in some circumstances, prevent patentability. However, not all countries conduct a substantive examination for patentability, and the definition of prior art depends on the law of the country, so invalid patents are occasionally granted.

[129] These provisions are still in effect in some countries. TRIPS Article 65.4 permits developing country Members to defer implementation of full subject matter protection until 1 January 2005 if those Members did not protect certain products on 1 January 2000. TRIPS Article 66.1 permits least-developed country Members to defer implementation of most provisions for a period of ten years, (that is, until 1 January 2005). On 22 June 2002, the TRIPS Council, the WTO council responsible for intellectual property, approved an extension until 1 January 2016 for least-developed countries to provide protection for pharmaceutical products and a waiver of the exclusive marketing rights provisions under TRIPS Article 70.9 during that same period. On 11 June 2013, that deadline was extended to 1 July 2021, with a further extension possible thereafter.

exclusions and limitations most often applied to food or pharmaceutical products but occasionally also applied to processes to make pharmaceuticals.[130] WTO Members whose laws contained such provisions were given a period of time in which to bring their patent laws into conformity with the requirements of the TRIPS Agreement, in particular, TRIPS Article 27.1, which requires WTO Members to offer patents "for any inventions, whether products or processes, in all fields of technology" and to make patents "available and patent rights enjoyable without discrimination as to the place of invention, the field of technology and whether products are imported or locally produced." Exceptions were limited to those set forth in TRIPS Article 27 (where necessary to protect *ordre public* or morality; diagnostic, therapeutic and surgical methods; and plants and animals other than microorganisms; these are discussed in the chapter on Patents).

Under TRIPS Article 65.5, Members are not permitted to adopt provisions that result in a lesser degree of consistency with TRIPS. It is therefore not acceptable for a WTO Member to broaden the exceptions in its patent law to correspond to those for which the transition period is allowed.

> **Example**: Before adoption of its current intellectual property law, Egypt excluded patentability for chemical products for foods or pharmaceuticals. This exception was narrower than permitted under TRIPS since other types of agricultural chemical products were patentable subject matter. Egypt therefore could not have ceased offering patents for agricultural chemical products until the end of the transition period.

TRIPS REQUIREMENTS RELATING TO PHARMACEUTICAL AND AGRICULTURAL CHEMICAL PRODUCTS

The table on the next page summarizes provisions of the TRIPS Agreement that relate specifically to pharmaceutical and agricultural chemical products.

[130] In Egypt, the exclusion under prior law referred to chemical products that may be used as foods or pharmaceuticals.

TRANSITION PERIOD AND REQUIREMENTS RESULTING FROM DEFERRING IMPLEMENTATION

TRIPS Article 70 sets a number of requirements for WTO Members that do not make available as of the date of entry into force of the WTO Agreement patent protection for pharmaceutical and agricultural chemical products commensurate with obligations under Article 27.

Any Member that elects to defer implementation of patent protection for agricultural chemical or pharmaceutical products under the transition period must take three steps:

1) Allow the amendment of applications pending on the date of application of TRIPS in that Member to claim any enhanced protection provided under TRIPS, but not to include new matter (TRIPS Article 70.7).

2) Establish a *mailbox* to allow the filing of a patent application covering pharmaceutical and agricultural chemical products for which patent protection is not available because of the Member's election to defer implementation under the transition period (Article 70.8), and

3) Offer exclusive marketing rights for products that are covered in mailbox applications and meet certain other requirements (TRIPS Article 70.9).

Table 5. Special WTO Requirements Relating to Pharmaceutical and Agricultural Chemical Products

Article	Requirement
Article 27—Full subject matter protection under patent law **Article 65.4**—Transition period	**Article 27** requires that patents be available in all fields of technology. **Article 65.4** provides a transition period for developing countries to implement patent protection for products that were not patentable subject matter on the date of general application of the TRIPS Agreement.
Articles 65.5, 70.8, 70.9 – Requirements during the transition period	**Article 65.5** prohibits changes that provide a lesser degree of TRIPS consistency. **Article 70.8** requires a Member not providing full subject matter protection during the transition to establish a means to receive applications for pharmaceutical or agricultural chemical products ("mailbox") and accord certain benefits from 1 January 1995 until protection is provided. **Article 70.9** requires Members to provide a period of exclusive marketing rights for products that are the subject of mailbox

Article	Requirement
	applications and meet certain conditions.
Article 39.3— Protection of test and other data	**Article 39.3** requires protection of test and other data submitted as a condition of obtaining marketing approval for pharmaceutical products or agricultural chemical products. Members are required to protect such data against disclosure and unfair commercial use.

MAILBOX

Each WTO Member that does not offer patent protection for pharmaceutical and agricultural chemical products from the date of entry into force of the WTO Agreement must establish a means by which patent applications can be filed for such inventions. (TRIPS Article 70.8) This system is sometimes referred to as a *mailbox*. During the transition period, mailbox applications for pharmaceutical and agricultural products are not subject to being automatically rejected on the ground that they claim subject matter for which protection is not yet available. Instead, the application is placed in a different status (the mailbox). The Member may defer issuing the patent until its law provides for patent protection for the type of subject matter claimed, and the invention must receive patent protection from the date the patent issues until the remainder of its term, determined consistently with Article 33 of the TRIPS Agreement.

Applications deposited in the mailbox—that is, filed with the patent office during the transition period—must receive the benefit of the filing date on which the application is deposited, or an earlier priority date if applicable. In determining patentability (for example, through examination), the criteria for patentability—novelty, inventive step, industrial applicability—must be applied to mailbox applications as if those criteria were being applied on the application's filing date or earlier priority date if priority is applicable and claimed. Receiving an early filing date is important in patent practice because of the novelty and inventive step requirements, under which later-filed applications are examined against earlier-filed applications and also against what is already known as of the filing date.

Certain actions defined under national law—typically selling the product, describing it in a patent or printed publication, or other steps that would cause it to be known—destroy novelty and therefore patentability. Under the *mailbox* provision, a patent application covering an invention of a pharmaceutical product could be deposited with the patent office, and the application would be examined on the basis of the situation as it existed at the time of filing. This avoids the two undesirable consequences: that the application would be rejected as claiming

unpatentable subject matter (that is, claiming pharmaceutical or agricultural chemical products), or that the applicant would be unable to continue to develop and market the invention until the end of the transition period without risking loss of patent rights.

TRIPS requirements for mailbox applications are limited to the requirements of

1) Providing a means for filing such applications during the transition period,

2) Applying the criteria for patentability as of the actual filing date or priority date, as applicable, and

3) Providing patent protection from the date the patent is granted until the end of the patent term, which is calculated on the basis of the original filing date.

In short, the Member must accept the applications without automatically rejecting them on the ground that pharmaceutical and agricultural chemical products are unpatentable subject matter in the territory of that WTO Member and, if the application is found to be patentable, grant protection for the remainder of the patent term.

This requirement raises a number of implementation issues, as TRIPS does not specify further details on how the mailbox provision is to be implemented. For example, TRIPS is silent on the question of whether a patent office that examines applications may conduct all or a portion of the examination on the application prior to the end of the transition period. Conducting the examination as to other issues—examination for formalities, examination for adequacy of disclosure, novelty, inventive step, and industrial applicability—offers some advantages. For the applicant who will eventually receive a patent, early examination shortens the time the application is pending.[131] For the public, an earlier examination will mean that mailbox inventions that are unpatentable on grounds other than subject matter can be disposed of earlier—a particularly important advantage in countries that offer provisional rights.

[131] TRIPS Article 70.9 addresses this issue with regard to exclusive marketing rights for mailbox applications.

As another example, TRIPS is silent on whether a mailbox application should be considered as prior art (part of the known subject matter). This depends in part on whether the office considers pending applications to form part of the prior art upon filing, upon publication, or at some other point in the patenting process. As a practical consideration, offices must decide whether mailbox applications will be searched in the course of examining other patent applications. Since the disclosure in a patent application for a chemical product may be relevant to a decision on novelty or inventive step for a patent application for a chemical process, this decision has practical implications. If mailbox applications are not included in patent searches, a patent could be granted inappropriately on a later-filed application by another party.

EXCLUSIVE MARKETING RIGHTS

A second requirement for WTO Members taking advantage of the transition period is that such Members must establish a system for offering exclusive marketing rights for up to five years for products covered by mailbox applications. However, the period of exclusive marketing rights could expire sooner, on the date when either (1) a patent is granted (in which case the patent owner would rely on his or her patent instead of the exclusive marketing rights) or (2) the patent application is rejected.

Under TRIPS Article 70.9, to the extent that a WTO Member does not make patent protection available for pharmaceutical and agricultural chemical products, the Member must make exclusive marketing rights available for products that satisfy the following conditions:

1) A patent application must have been filed in the WTO Member where exclusive marketing rights are to be obtained, and that patent application must be subject to the “mailbox” provisions of TRIPS Article 70.8;

2) Subsequent to the entry into force of the WTO Agreement, a patent must have been granted for that product in another WTO Member; and

3) Subsequent to the entry into force of the WTO Agreement, marketing approval must have been obtained in that same WTO Member where the patent was obtained.

When all conditions are met, the relevant ministry or agency should refuse marketing approval for the product to any other party than the owner of the mailbox patent application, since a party that is entitled to exclusive marketing

rights clearly does not have exclusive rights if another party has permission to market the same product.

Exclusive marketing rights must be implemented during any period when a Member exercises the right to defer implementation of full subject matter patent protection for pharmaceutical and agricultural chemical products. If a Member implements patent protection sooner than the end of that transition period, the obligation to offer exclusive marketing rights would terminate as to new applications, and the term of exclusive marketing rights for existing mailbox applications would end when a patent is issued or the patent application rejected, whichever occurs earlier.

While the patent system offers exclusive rights only to inventions that meet certain requirements, including novelty, the system of exclusive marketing rights does not include any such provisions. That is, there is no basis on which a WTO Member may refuse exclusive marketing rights for any invention that meets the TRIPS requirements.

This raises two implementation issues. First, exclusive marketing rights may be required even if marketing approval has already been granted to another party. In such a case, the Member may be required to terminate marketing approval that has been granted to a party other than the owner of the mailbox patent application.

Second, unexamined mailbox applications may refer to subject matter that would not be granted a patent in the Member for reasons other than being excluded subject matter, (for example, for lack of novelty). For exclusive marketing rights, this risk is somewhat minimized by the fact the applicant must have received a patent in another WTO Member and also marketing approval in that Member. However, not all WTO Members examine patent applications, so there is a risk of offering exclusive marketing rights to a product that would not be entitled to them under a TRIPS-consistent patent law.

This risk is eliminated when the WTO Member adopts full subject matter patent protection, which may be sooner than the end of the transition period. The risk can be minimized if the patent office examines applications that are in the mailbox. In the latter case, the patent office could reject applications that failed to meet other standards of patentability, such as novelty, inventive step, or industrial applicability, even though the office would not be able to issue patent until permitted under national law or the end of the transition period, whichever is sooner.

These issues highlight the fact that exclusive marketing rights are intended only as a temporary measure to compensate for the lack of full subject matter patent protection.

DATA EXCLUSIVITY

All WTO Members are required to offer protection for data that is submitted as a condition for obtaining marketing approval for pharmaceutical or agricultural chemical products that use a new chemical entity. Under TRIPS Article 39.3, provisions requiring data exclusivity apply only to pharmaceutical and agricultural chemical products *if*

1) The products use a new chemical entity,

2) The government requires the submission of test data or other data as a condition for marketing approval, and

3) A "considerable effort" to originate (create) the data.

If the provision applies, the Government of the WTO Member must

1) Protect the data against unfair commercial use, and

2) Protect the data against disclosure except

   a) "where necessary to protect the public" *or*
   b) "unless steps are taken to ensure that the data are protected against unfair commercial use."

The date when a Member becomes obligated to implement this protection is set forth in TRIPS Article 65(2). Egypt was obligated to implement this provision by 1 January 2000.

The term *new chemical entity* is not defined in the TRIPS Agreement. It is a term of art drawn from American regulatory practice, where it refers to a product containing an ingredient that the U.S. Food and Drug Administration has not previously approved for marketing. Thus, "pharmaceutical or agricultural chemical products which utilise new chemical entities" (TRIPS 39.3) are those products which include a chemical compound or composition that has not previously been approved for marketing in that Member.

Since the phrase *new chemical entity* is a term of art, it is inappropriate to attempt to construe its meaning one word at a time. In its proper context, *new* means *new to the*

regulatory process. Data are protected against disclosure or unfair commercial use in order to encourage adequate testing before a product is introduced to the public. In order to accomplish the goal of protecting the public, regulatory officials need sufficient data to make a determination about the effectiveness and safety of a product for its intended use. A product that is safe and effective when used in one manner may be dangerous or ineffective when used for a different purpose or under different conditions. If a new application of a product requires additional regulatory review—and additional data—that data should be protected.

The requirement to protect data has nothing to do with patentability, and the term *new chemical entity* should not be confused with the novelty requirements of the patent system. To be patentable, a product must be *new* or *novel* in the sense that it is not known by others, since the public gains no benefit from according exclusive rights to products that are already known. By contrast, the public stands to gain access to products that address different needs if those products are introduced to the regulatory process—even if the products themselves are not *new* in the patent sense. Consequently, a *new chemical entity* could even be a naturally occurring product submitted for marketing approval, so long as the ingredients of that product are new to the regulatory process, that is, have not previously been approved for marketing.

It is equally clear that the product must only be new to the regulatory process in the particular WTO Member that is conducting the regulatory review, not worldwide, since expanding the term to mean *new anywhere in the world* would mean that data would only be protected in the first country where an application for marketing approval was made. An attempt to impose a more stringent interpretation—absolute novelty—mixes concepts of data protection with patent principles.

From a policy perspective, the contrary position would inhibit the introduction of new products into any country whose government took such a position, since companies would not want to risk their valuable data in a market where they could not protect it. Likewise, *new* must mean *not previously approved for the particular use*, as opposed to *not previously submitted* in order to be consistent with the spirit of the provision and the policy interests it serves. Regulatory agencies need the ability to request additional data in order to satisfy their responsibilities to the public. Taking the contrary position for the sake of argument, if a government limited the protection of data to only those instances where a product was submitted to the regulatory process for the first time anywhere, the agency would

have no ability to protect additional data and would therefore find it difficult to obtain such data on request.

One aspect of data exclusivity is protecting the data against disclosure, except for the information that must be revealed to protect the public. It is important to make a clear distinction between *data* (which must be protected) and other information. A physician or member of the public may need to know, for example, indications, contraindications, and side effects of a particular product. However, the data used to develop those conclusions and recommendations—the results of clinical testing—is of interest in most cases to only a few persons who are involved in reviewing the data to determine whether the drug is safe and effective.

Applications for marketing approval are often circulated to a number of persons, for administrative handling or scientific review. Each person with access to the data should be subject to a prohibition against disclosure of the data to others or making personal use of such data. Other safeguards should include physical protection of the data, for example, by placing the data in a secure location and limiting access to persons who are authorized to have access to such data.

The requirement to protect against disclosure is indefinite, that is, the TRIPS Agreement specifies no definite term after which the data may be disclosed. The period during which data are protected against unfair commercial use varies considerably. The European standard is ten years.

The other aspect of data protection is protection against *unfair commercial use*. It is generally accepted that the principal unfair commercial use of data occurs when one party uses the data of another party in order to obtain a registration or marketing approval. Such use is unfair because it allows the second party to take advantage of the investment of labor and resources of another. While the amount of money required to develop a new pharmaceutical product is large, it is dwarfed, in most cases, by the expense of testing that new product.

Countries want to encourage adequate testing, which is expensive. Countries also want to take advantage of the latest developments in pharmaceutical products by having new products introduced into the domestic market as quickly as possible after testing is completed. This interest is not supported if the developer of a new product is not guaranteed a reasonable period in which no other party can rely on those data to put its product on the market.

In some countries, including Egypt, a party that wants to market a pharmaceutical product can obtain approval by submitting test data showing that the product is equivalent to another product that is already approved. Rather than showing safety and efficacy (which requires a large amount of data and significant expense to produce such data), the second party can merely refer to the safety and efficacy data that has already been submitted by the first party, who developed it at considerable expense. In countries with such policies, the developer of the data may decide to delay the introduction of a new product from the market in the country until the developer has recovered a significant part of its expense of development and only then introduce the product into the market of that country.

9 COPYRIGHT AND RELATED RIGHTS

Copyright and related rights form a major branch of intellectual property. *Copyright* protects the right of an author to prevent the unauthorized copying or modification of a work of authorship.

Copyright protects works of authorship, such as literary works, dramatic works, musical works, audiovisual works, or works of visual art. Literary works are often embodied in such familiar forms as books, poems, or essays, but also in more modern works such as computer programs and electronic files of musical works. Dramatic works may be embodied in plays. Musical works may be embodied in written musical notation or sound recordings. Audiovisual works may be embodied in such forms as movies or videos. Works of visual art may be embodied in such familiar forms as sculptures, paintings, architectural works, technical drawings, maps, or photographs. In addition, some forms of intellectual property are protected in some countries under copyright law and in other countries through industrial designs or a *sui generis* system of protection.

Closely related to copyright is the area of related rights or neighboring rights, which protect the rights of performers, producers of phonograms (sound recordings) and broadcasting organizations to prevent the unauthorized recording or broadcast of performances, and the unauthorized copying or broadcast of such recordings.

SUBJECT MATTER PROTECTED BY COPYRIGHT

Copyright extends to any work of authorship. Although copyright is commonly associated with cultural works, attorneys must learn to think expansively about the many types of works protected by copyright and how clients can use copyright as a

tool to strengthen their business interests. Copyright offers protection for a broad range of works, as shown in the charts below.[132]

Copyright protects the form of expression of the work of authorship, not to the ideas or information that might be described in it or that might form the basis for the work. The TRIPS Agreement provides that "Copyright protection shall extend to expressions and not to ideas, procedures, methods of operation or mathematical concepts as such."[133]

NOT PROTECTED UNDER COPYRIGHT

- Ideas
- Procedures
- Methods of operation
- Mathematical concepts

– *TRIPS Article 9.2*

TRIPS also requires protection for "[c]ompilations of data or other material, … which by reason of the selection or arrangement of their contents constitute intellectual creations" but provides that "[s]uch protection, which shall not extend to the data or material itself, shall be without prejudice to any copyright subsisting in the data or material itself."[134]

Thus, it is possible to claim copyright in a work of authorship that presents information in a particular way, even though the individual elements of that information may not be subject to copyright protection. A clear example is a directory, which organizes such information as names, addresses, telephone numbers, and possibly other information in a particular way. Another party would infringe copyright by reproducing copies of the directory without permission of the owner, but there would be no infringement in copying an item of data such as a particular name and telephone number from the directory.

[132] The categories of works shown in these tables and some of their definitions are taken from U.S. law, 17 U.S.C. §§101-102, as they provide a convenient way of discussing copyright issues. Examples are also found in Berne Convention Article 2.

[133] TRIPS Article 9.2.

[134] TRIPS Article 10.2.

WORKS PROTECTED BY COPYRIGHT

Non-dramatic literary works include, but are not limited to, the following:

- Articles and essays
- Books and stories, whether fiction, or nonfiction
- Bound or loose-leaf volumes, pamphlets, or brochures, and single pages containing text
- Catalogues
- Compilations, including compilations of data
- Computer programs
- Directories
- Dissertations, theses, reports
- Poetry
- Speeches
- Sermons
- **Compilations and collective works**, including compilations of data, are protected without prejudice to copyright in their individual works. Examples of collective works include:
- Academic and technical journals
- Anthologies
- CDs or audiotapes containing songs based on a theme
- Encyclopedias
- Magazines
- Newspapers

Derivative works include, but are not limited to the following:

- Translations of books, movies, directories, or other literary and artistic works
- Modifications to computer programs
- Adaptations of literary and artistic works, such as a screenplay or movie based on a book
- Arrangements of musical works

There is no specific requirement as to the printing, binding, format, paper size or quality of unpublished manuscript material.

The protection of oral works, such as speeches and sermons, may be subject to a requirement of fixation, depending on national law.

WORKS PROTECTED BY COPYRIGHT, CONTINUED

Musical works include both original compositions and original arrangements or other new versions of earlier compositions to which new copyrightable authorship has been added. Copyright of a musical work can cover music or both words and music.

Sound recordings are works that result from the fixation of a series of musical, spoken, or other sounds. Common examples include recordings of music, drama, lectures, and telephone ringtones.

Dramatic works are works that are intended to be performed. Dramatic works usually include spoken text, plot, and directions for action. Examples of dramatic works include, but are not limited to, the following:

- Choreography
- Plays
- Pantomimes
- Scripts and treatments prepared for cinema, radio, or television

Dramatic works may exist with or without music. Choreography (the composition and arrangement of dance movements and patterns usually intended to be accompanied by music) and pantomime (the art of imitating or acting out situations, characters, or other events) need not tell a story or be presented before an audience, but to be protected in most countries, each work must be fixed in a tangible medium of expression from which the work can be performed.

Audiovisual works are works that consist of a series of related images together with accompanying sounds. The works are embodied in material objects, such as films, tapes, CDs, or videodiscs, and are shown by use of machines or devices. Examples include, but are not limited to, the following:

- Motion pictures
- Video games
- Video recordings

WORKS PROTECTED BY COPYRIGHT, CONTINUED

Works of visual art are pictorial, graphic, or sculptural works, including 2-dimensional and 3-dimensional works of fine, graphic, and applied art.

Examples of works of visual art include, but are not limited to, the following:

- Advertisements, commercial prints, and labels
- Architectural works and models
- Artificial flowers and plants
- Artwork applied to clothing or to other useful articles
- Bumper stickers, decals, stickers
- Cartographic works, such as maps, globes, and relief models
- Cartoons, comic strips
- Collages
- Dolls, toys
- Drawings, paintings, murals
- Enamel works
- Fabric, floor, and wall covering designs
- Games, puzzles
- Greeting cards, postcards, stationery
- Holograms, computer and laser artwork
- Jewelry designs
- Maps, globes, charts, technical drawings, and diagrams
- Models
- Mosaics
- Needlework and craft kits
- Original prints, such as engravings, etchings, serigraphs, silk screen prints, or woodblock prints
- Patterns for sewing, knitting, crochet, or needlework
- Photographs and photomontages
- Prints and art reproductions
- Posters

REQUIREMENTS FOR COPYRIGHT PROTECTION

A work of authorship is protected in accordance with the national law of the country where protection is claimed. Under the Berne Convention, the enjoyment and exercise of rights cannot be made “subject to any formality” nor can it be made to depend on protection of the work in its country of origin. (Berne Article

5) The TRIPS Agreement makes this provision applicable to WTO Members[135] as well. Protection can be conditioned on fixation of the work in a tangible medium of expression, for example, written on paper, stored on disc, painted on canvas, or recorded on tape or film. This condition is a common feature of national laws.

In either event, a work is automatically protected in Berne countries or WTO Members without the necessity of any procedures, such as registration or marking. This is very different from requirements for protection of inventions, marks, industrial designs, or plant varieties, which require the owner to submit an application that may be subject to examination.

By contrast, the Universal Copyright Convention (UCC) permits its contracting states to condition copyright protection on compliance with such formalities as deposit, registration, notice, and the like.[136] However, even where formalities are required as a condition of protection, UCC Contracting states must provide equivalent protection to unpublished works without the requirement of compliance with formalities.[137]

Note that the Berne Convention does not *prohibit* such formalities as registration, deposit, notice or marking, or the recordation of transfers of ownership. These are features of the copyright system in a number of Berne Countries, where they are used by copyright owners to establish evidence of authorship of a work, the date on which a work was completed, and initial ownership or transfers of ownership, and to give notice of their claim of copyright in the work. However, in Berne countries, these formalities cannot be a condition for the availability of copyright protection.

EXCEPTIONS TO COPYRIGHT

The TRIPS Agreement permits WTO Members to provide for limitations or exceptions to copyright protection under their national laws, provided that these

[135] TRIPS Article 9.1 provides that "Members shall comply with Articles 1 through 21 of the Berne Convention (1971) and the Appendix thereto. However, Members shall not have rights or obligations under this Agreement in respect of the rights conferred under Article 6bis of that Convention or of the rights derived therefrom."

[136] UCC Article 3.

[137] UCC Article 3.4: "In each Contracting State there shall be legal means of protecting without formalities the unpublished works of nationals of other Contracting States."

limitations and exceptions "do not conflict with a normal exploitation of the work and do not unreasonably prejudice the legitimate interests of the copyright owner." (TRIPS Article 13) Note that a similar limitation occurs in Berne Article 9 with respect to the right of authors to authorize reproduction of their works. The TRIPS restrictions must be met even where broader exceptions are permitted under the Berne Convention. A common exception to Berne and TRIPS is the exclusion from copyright protection of official government works, such as copies of statutes or judicial opinions.

DETERMINING AUTHORSHIP

An *author* is the creator of the original expression in a work. Determination of authorship is a question of fact. A person should not be listed as an author merely as a courtesy or honor, for example, to gain credibility for the work by association with the name of an expert in the field or to show appreciation to a supervisor. Likewise, it is improper to fail to include as an author a person who contributed to the creation of the work.[138]

Determination of authorship has important legal implications. A person cannot claim copyright to another's work, no matter how much he or she changes it, although where a work is modified, it becomes a separate work (Berne Article 12), and if the modification was done with the consent of the original owner, the person who made the modifications would have rights in the modified work. An author whose name is omitted has a cause of action to remedy that omission. Incorrect attribution of authorship compromises the ability to exploit a work. For technical documents, the relatively common practice of listing authors as a matter of courtesy can affect the patentability of inventions and raise questions about ownership of patent rights.

An interesting legal question is the extent to which an individual can prevent the use of his or her name in connection with a work. For a work that has been modified, it is clear that the author can assert the moral right to object to a modification prejudicial to the author's honor or reputation.[139] This right should

---

[138] In countries where an employer is considered the author of works made in the course of employment, the individual who actually prepared a work presumably cannot assert a claim to be named as the work's author since, by action of law, that person is not considered to be the author.

[139] Berne Article 6*bis*(1).

also extend to the situation where an individual objects to the final form of a work that may have been, for example, prepared in collaboration with others, on the theory that each version of a work in progress constitutes a separate work for copyright purposes. If an author makes a contribution to such a work in progress and the work is later modified by co-authors, the author whose contribution was modified could object to the modification. Since the "right to claim authorship of the work" is at the option of the author, the moral right could be construed to include the author's right not to claim authorship of the resulting work.[140] Another issue arises where an individual is named as an author of a work to which he or she did not contribute. Depending on the factual situation, some countries may afford relief on grounds of fraud, unjust enrichment, misappropriation of a right of publicity, or other claim of unfair competition, while others may consider the right to object to be an aspect of the author's moral rights.

The author of a work is the owner of copyright in that work unless ownership is transferred to another person or entity. This can happen if the author assigns the work, for example, to a publisher, or pursuant to the terms of a contract. Depending on national law, this transfer of ownership may occur automatically in certain employment situations. By contrast, under U.S. law, the employer or commissioning party is considered to be the author of the work in certain narrowly defined situations.

ESTABLISHING AUTHORSHIP

To establish authorship under the Berne Convention, it is ordinarily sufficient for the name of the author of a literary or artistic work to appear on the work in the usual manner. (Berne Article 15) This is true even if the name is a pseudonym, provided that the pseudonym leaves no doubt as to the identity of the author. The appearance of the author's name on the work in the usual manner is sufficient evidence, in the absence of proof to the contrary, to enable the author to institute infringement proceedings.[141] Similarly for cinematographic works, the person or corporate body whose name appears on the work in the usual manner is presumed, in the absence of proof to the contrary, to be the maker of the work.[142] For

[140] The laws of some countries prohibit an advance agreement not to exercise moral rights.

[141] Berne Article 15(1).

[142] Berne Article 15(2).

anonymous and pseudonymous works, other than those mentioned above, the "publisher whose name appears on the work" is, "in the absence of proof to the contrary, … deemed to represent the author," and is "entitled to protect and enforce the author's rights," until such time as the "author reveals his [or her] identity and establishes his [or her] claim to authorship of the work."[143] These same provisions are applicable to WTO Members, whether or not they are members of the Berne Convention.

While these provisions address the usual situation, situations arise in which authorship is in doubt or in which an author's claim is contested. In these cases, it is necessary to produce evidence to establish the authorship of a work.

Ordinarily, the author is the person who creates and first records the work in a tangible medium of expression—the person who writes the book, makes the photograph, paints the picture, etc. Evidence of authorship might therefore include documents showing that a person engaged in that process—earlier drafts of the book, other exposures on a roll of film or receipts for developing the film, preliminary sketches of the painting, sculpture, or architectural work. Other evidence may include testimony by persons who observed the author at work, as well as any other evidence that would be probative of the question of authorship.

Recording a work is not absolute evidence of authorship, since the author is not necessarily the same person who prepares the physical object in which the work is embodied. For example, an author may dictate a book to a secretary or scribe, who faithfully records the author's words but is not an author. On the other hand, a person who records the words may participate in determining their content or style, by suggesting topics to cover or suggesting phrases, descriptions, or examples; in that case, such person may be an author.

In determining authorship, look to the source of the original expression. If the person who prepares the physical object in which the work is embodied takes detailed direction from another person, the person giving detailed directions is the author and the person preparing the physical object is not a joint author, even if the person who prepares the physical object brings to that process a degree of technical skill.

---

[143] Berne Article 15(3).

JOINT AUTHORSHIP

In some cases, more than one person may contribute to the creation of a work. Such persons are joint authors, and each owns copyright in the work.

Establishing joint authorship raises a number of issues. It is not necessary that joint authors have made the same degree of creative contribution, but to be joint authors, each must have made some original contribution to the work. Likewise, it is not necessary that joint authors work together in a physical sense—being present at the same place and time—in order to establish joint authorship, but there must be some degree of cooperation between (or among) their contributions, and those contributions must have been made to the same work. A single individual may compose both words and music, but if two or more persons are involved, an additional determination is required.

> **Example 1:** Person A played piano and Person B recorded lyrics for a new song, but the composition was carried out interactively, with both Person A and Person B contributing words and both Person A and Person B contributing to the music. Persons A and B are joint authors of the song, and joint authors both of the lyrics and music.
>
> **Example 2:** Person A played piano and composed the tune for a new musical piece, while Person B wrote lyrics to match the tune. The composition was not carried out interactively, as each did his or her own part. Person A is the sole author of the music, and Person B is the sole author of the words.
>
> **Example 3:** Person A composed music in her studio in Cairo, Person B wrote lyrics from his home in Shabin el Kom, and they corresponded by e-mail. Notwithstanding that they did not work in the same place, the composition was carried out interactively, with Person A suggesting changes in the words, and Person B suggesting changes in the music. Persons A and B are joint authors of the song, including both words and music.

In determining whether Persons A and B are joint authors in Example 2 above, it is useful to consider whether the nature of the contributions can be separated without destroying the form of expression. If the contributions form a unified work, with

the parts cooperating, the situation suggests joint authorship of the entire work.[144] If the contributions can be separated and each can stand independently, it suggests that the contributors are not necessarily joint authors. However, the nature of the collaboration is a more important consideration, and situations exist where it is not possible to separate out the work of one person from a general collaboration that resulted in the work.

The nature and extent of the ability of each joint author to exploit the work independently of the other(s) depends on national law. Since the ability to convey an exclusive right generally carries greater economic benefit than the ability to convey a mere nonexclusive license, the best practice is to exploit the work as though only a single person owned copyright—either by assignment to a common owner or by agreement among the joint authors to act only by agreement. Otherwise, the advantages of owning exclusive rights may be lost as each of the authors makes separate agreements. Some countries have addressed this issue through their national laws.

TERM

The term of copyright protection depends on national law. Berne Convention Article 7 specifies a minimum term of "the life of the author and fifty years after [the author's] death."[145] For cinematographic works, Berne countries may provide a term of protection that should not expire before "fifty years after the work has been made available to the public with the consent of the author," or, if the work is not made available to the public with the consent of the author within fifty years from the making of the cinematographic work, then fifty years after the making of the work.

---

[144] U.S. law refers to this type of work as a "joint work," that is, "a work prepared by two or more authors with the intention that their contributions be merged into inseparable or interdependent parts of a unitary whole." 17. U.S.C. §101.

[145] The UCC provides a minimum term of "not less than the life of the author and twenty-five years after his [or her] death," or in contracting states that, on the effective date of the UCC in that state, "had limited the term for certain classes of works to a period computed from the first publication of the work," those contracting states were entitled to maintain these exceptions and extend them to other classes of works," provided that for those classes, the term of protection must not be less than twenty-five years from the date of first publication. UCC Article IV (2).

Berne Article 7*bis* provides that in the case of a work of joint authorship, where the term of protection is measured from the death of the author, the term is to be calculated from the death of the last surviving author.

For anonymous or pseudonymous works, the Berne Convention requires a minimum term of protection of "fifty years after the work has been lawfully made available to the public. However, when the pseudonym adopted by the author leaves no doubt as to his [or her] identity," or when the author of an anonymous or pseudonymous work discloses his or her identity during the fifty-year period after the work has been lawfully made available to the public, the applicable term is the same as in cases where the author of the work was known.

The Berne Convention does not require protection of anonymous or pseudonymous works when it is reasonable to presume that their author has been dead for fifty years. (Article 7) Berne Article 7 permits member countries to determine the term of protection of "photographic works and … of works of applied art in so far as they are protected as artistic works," provided that the term is "at least … twenty-five years from the making of such a work."

The term of protection subsequent to the death of the author and the other terms provided for cinematographic works, anonymous or pseudonymous works, photographic works, and works of applied art must always be deemed to begin on the first of January of the year following the death or other event mentioned. The TRIPS Agreement provides for a term of not less than fifty years after the last day of the year in which the death or other event occurred. (Article 7(5)) In cases of joint authorship, Berne Article 7*bis* provides that the term is measured from the death of the last surviving author.

It is permitted to grant a term of protection in excess of the terms mentioned. For WTO Members, the principles of national treatment and most favored nation treatment require that the copyright term be the same as, and no less favorable than, that accorded to any other Member. Unless a Berne country's domestic legislation provides otherwise, the term of protection it provides to foreign works should not exceed the term fixed in the country of origin if the country of origin is a member of Berne but not of the WTO. (Article 7(8))

RIGHTS PROTECTED UNDER COPYRIGHT

Copyright protects the rights of the author in a work of authorship. The rights of the author include both economic and moral rights.

The basic economic protection of copyright law is the right of the author to prevent others from copying the work. Copying consists not only of reproducing an identical copy of a work but also includes other forms of copying, such as making a work that is based on the original. In addition, copyright protects certain other rights of the author. Copyright does not allow the owner to prohibit others from producing original works, that is, works that are not copies, even if they are similar to the works of the author.

ECONOMIC RIGHTS

Copyright gives the owner of the work the right to exclude others from doing certain acts without authorization. These acts generally include reproducing, distributing, or selling copies of the work, publicly performing a dramatic work or displaying a work of visual arts, broadcasting the work, and translating or preparing other derivative works based on the original work. Derivative works include "[t]ranslations, adaptations, arrangements of music[,] and other alterations of a literary or artistic work." (Article 12) For example, a motion picture based on a literary work would be a derivative work. Berne Article 2.3 requires that derivative works must be "protected as originals without prejudice to the copyright in the original work." Under TRIPS, WTO Members are required to include among the author's rights the exclusive right to "to authorize or to prohibit the commercial rental to the public of originals or copies" of at least their cinematographic works and computer programs. The Berne Convention specifies minimum levels of protection that must be provided. The economic rights provided under copyright are shown in the accompanying tables.

Table 6. Economic Rights of the Author According to Berne Convention

Right	Type of Work	Scope of Right	Article No.
Reproduction	Literary and artistic works	Authors have exclusive right to authorize the reproduction of their works, in any manner or form, including sound or visual recording.	Article 9
Adaptation	Literary and artistic works	Authors have exclusive right to authorize adaptations, arrangements and other alterations of their works.	Article 12
Translation	Literary and artistic works	Authors have exclusive right to make and authorize the translation of their works.	Article 8

Right	Type of Work	Scope of Right	Article No.
Public recitation	Literary works	Authors have exclusive right to authorize the public recitation of their works, by any means or process, and any communication to the public of the recitation, including recitation of translations.	Article 11ter
Public performance	Dramatic, dramatico-musical and musical works	Authors have exclusive right to authorize the public performance of their works, by any means or process, and any communication to the public of the performance of their works.	Article 11
Broadcasting	Literary and artistic works	Authors have exclusive right to authorize the broadcasting of their works or the communication thereof to the public by any other means of wireless diffusion of signs, sounds or images, including rebroadcasting and public communication of a broadcast.	Article 11*bis*
Cinematic adaptation, reproduction, distribution, and public performance	Literary and artistic works	Authors have exclusive right to authorize the cinematographic adaptation and reproduction of their works; the distribution, public performance and communication to the public by wire, of the works adapted or reproduced; and adaptation into any other artistic form of a cinematographic production derived from literary or artistic works.	Article 14
Droit de suite	Original works of art and original manuscripts of writers and composers	Authors have exclusive right to authorize the inalienable right to an interest in any sale of the work subsequent to the first transfer by the author of the work; right may be exercised by authorized person after death of author; subject to national law.	Berne Article 14*ter*

MORAL RIGHTS

The term *moral rights* refers to a cluster of rights provided in the copyright laws or arising from court decisions in various countries. In some cases, these rights may be of more concern to an author than the economic rights associated with the work.

Copyright protects both economic and non-economic rights of authors. Although the principal emphasis of copyright law is on economic rights, copyright law also recognizes the rights of authors to certain non-economic rights known as the *droit moral* (plural *droits moraux*), or moral rights. Unlike an author's economic rights, moral rights are conceived of as being an extension of the personality of the author and therefore *inalienable*, that is, not subject to transfer by the author. In some countries, moral rights are also conceived as being not subject to surrender by the author. However, as discussed below, these rights may not be absolute.

Berne Convention Article 6*bis* requires *all* Berne countries to provide for moral rights.[146] The author must have the right to claim authorship of the work and to object to any "distortion, mutilation or other modification of the work, or any other derogatory action" in relation to the work, that "would be prejudicial to [the author's] honor or reputation."

Moral rights under Berne include the rights to

- Claim authorship of a work and
- Object to any
  - Distortion,
  - Mutilation, or
  - Other modification of the work

that would be prejudicial to the author's honor or reputation.

RIGHTS PROTECTED AS MORAL RIGHTS

The activities and rights protected as moral rights vary considerably among the countries of the world. Berne Convention Article 6*bis* requires only the right of attribution and the right of integrity, with the right of integrity being limited to acts that would be prejudicial to the honor or reputation of the author. However, the exact set of rights included under the category of moral rights varies from country to country and may include some or all of the following:

- **Right of attribution or authorship** (*droit à la paternité*). The author has the right to be named as author, adopt a pseudonym, or remain

[146] Unlike most provisions of the Berne Convention, this provision is not made applicable to WTO members under the TRIPS Agreement, and it is not a requirement under the Universal Copyright Convention. Therefore, to determine whether a country is obliged to protect moral rights, it is necessary to look to its membership in the Berne Convention or in another agreement that includes a similar requirement.

anonymous; to prevent attribution of the author's work to another; and to prevent the use of the author's name in connection with a work the author did not create or that has been modified. Associated rights may include:

— **Right of publicity**. The author's name must appear on the original and all copies and in all publicity materials.

— **Right to name work**. The name or title the author has given the work must be indicated.

— **Reverse right of attribution**. The author has the right to prevent the use of his or her name on a work the author did not create.

- **Right of (public) disclosure** (*droit de divulgation*). The author has the right to determine whether, when, and how a work will first be made available to the public.

- **Right of integrity** (*droit au respect de l'oeuvre*). The author has the right to object to any distortion, mutilation, or modification of the work. Associated rights may include:

— **Right of association**. The author has the right to prevent the use of the work in association with a product, service, cause or institution.

— **Right to withdraw (from publication) or modify (*droit de repentir ou de retrait*)**. The author has the right to withdraw the work from publication or to modify it, even after transferring economic rights, provided the author indemnifies the party to whom economic rights have been transferred.

— **Right of access**. The author has the right to demand access to his or her original work even after ownership of the physical embodiment of the work has been transferred.

— **Right to prevent destruction**. In a few countries, the author has the right to prevent the destruction of a work of art.

— **Right of repair**. The author may have the right to repair a work of art.

TERM OF PROTECTION OF MORAL RIGHTS

Under the Berne Convention, moral rights must be recognized independently of the author's economic rights and must continue even after transfer of the economic rights. The minimum term of these rights is the same as the term of economic

rights, but countries that, at the time they join Berne, do not provide for protection of the right of attribution and integrity after the death of the author, may continue this practice after joining Berne.

After the death of the author, Berne Article 6*bis* requires that moral rights be maintained at least until the expiration of the economic rights that is, the life of the author plus fifty years, or longer if provided under domestic law. Some countries have incorporated in their laws a much longer period for moral rights.

Berne Convention Article 6*bis* permits an exception for countries whose legislation, at the moment of their ratification of or accession to the Berne Convention, did not provide for protection of all the moral rights specified after the death of the author. In such cases, the country may provide that some of those rights may "cease to be maintained" after the author's death.

APPLICATION OF MORAL RIGHTS

The concept of moral rights can have significant practical effects that extend well beyond the author's right to receive credit for his or her literary or artistic contribution. After the expiration of economic rights, the author ordinarily no longer has the right to object to the reproduction or sale of the work or to the making of a derivative work based on the original. If, however, that reproduction, sale, or derivative work would be prejudicial to the author's honor or reputation, the moral right may create an independent basis for the author to object. In the following examples, consider whether the author would have the right to object to the proposed use on the grounds of moral rights:

> **Example 1**: A popular character from children's literature is used in a pornographic film. The original author no longer owns copyright in the work featuring the character.
>
> **Example 2**: A religious leader publishes an article which a publisher proposes to reprint in a magazine where it will be surrounded by material that followers of the religion would consider objectionable.

For works of visual art, an author may object to the destruction or placement of a work, even though the author has transferred ownership to another party. An author might object, for example, if a work of art designed for use in one setting were purchased with the intention of locating it in a different setting where it would be held up to ridicule. A moral rights claim might also be made on the basis of style—placing a modern sculpture in front of a traditional building, or vice

versa—where the work would perhaps become an object of scorn. Courts would be called on to decide such claims on the basis of the particular facts in each case.

Moral rights must be exercisable by the persons or institutions authorized to exercise such rights under national law in the country where protection is claimed. If the author is deceased, a claim of moral rights could be made by an appropriate party authorized to speak on the author's behalf.

Moral rights claims have been raised on the basis of a number of different factual circumstances. One type of case arises when a work is placed in a different context from that for which it was created or intended.[147] Richard Serra successfully challenged the relocation of his site-specific sculpture *Tilted Arc* from its original location. The work was removed and reportedly remains in storage because of the author's objection to having it displayed in any other location.

MORAL RIGHTS AND MODIFICATIONS

Cases involving the moral right of integrity have been raised in connection with modifications to a work. However, the right to authorize modifications is also an economic right of the author. In some jurisdictions, notably those influenced by French law, the right of integrity may extend to any modification of the work, while in other jurisdictions, a modification becomes a moral right—a violation of the right of integrity—only if the modification is of such a nature as to constitute a distortion or mutilation of the work, or is a modification of the work that would be prejudicial to the author's honor or reputation.

For example, the estate of John Huston asserted his moral right to prevent colorization of the black-and-white film *The Maltese Falcon*. The French court awarded damages and commented that colorization of the film against Huston's

---

[147] A claim based on context is not necessarily limited to works of visual art. In *Shostakovich v. Twentieth Century-Fox Film Corp.,* 80 N.Y.S.2d 575 (N.Y. Sup. Ct. 1948), aff'd, 87 N.Y.S.2d 430 (N.Y. App. Div. 1949) and the companion French case, *Societe Le Chant du Monde v. Societe Fox Europe and Societe Fox Americaine Twentieth Century,* four Russian authors who were citizens of the U.S.S.R. challenged the use of their works, including Shostakovich's *Chante du Monde,* in the sound track for the anti-Communist film, *The Iron Curtain.* In the United States, where moral rights were not protected at that time, the court refused to enjoin the use of the music and the composers' names because the works were in the public domain, although the court noted that such a claim might prevail under a claim of moral rights. In France, where moral rights were legally protected, the court enjoined showing the film and ordered copies to be seized.

wishes violated French law, "which protects the integrity of a literary or artistic work irrespective of the jurisdiction in which it was first published, and recognizes that the author is invested with the *droit moral* in that regard by virtue of the sole fact of his creative effort."[148]

In a Canadian visual arts case, sculptor Michael Snow brought a successful challenge with regard to his work *Flight Stop*, which depicts sixty Canada geese in flight, when the operator of the building where the work was displayed added bows to the geese during the Christmas season.[149] Canadian law was subsequently amended to provide that any modification to a painting, sculpture or engraving would be deemed to be prejudicial to the author.

A different result was reached in connection with the modification of the Egyptian musical work "Khosara, Khosara," written for use in the Egyptian film *Fata Ahlami*, when heirs of the composer Baligh Hamdy objected to the use of "samples" of the work in a hip-hop song. In a motion for partial summary judgment, plaintiffs argued that Egyptian law precluded the transfer of a right of modification, as that was a moral right under Egyptian law, while defendants pointed out that the right of adaptation is one of the financial or economic rights mentioned under Egypt's intellectual property law. The U.S. court rejected plaintiffs' argument that the right to make derivative works could not be assigned because "to do so would necessarily violate Egyptian law with respect to an artist's moral rights."[150] Although not a final decision, this holding appears to draw a distinction between adaptations or modifications that can be assigned as a part of an author's economic rights and the types of modifications that affect the integrity of a work and are therefore part of an author's moral rights.

MORAL RIGHTS AND WORKS OF VISUAL ART

Moral rights legislation strengthens the ability of an author to control a work even after the author has transferred rights to the tangible item in which the work is embodied. For example, even where the artist has sold a painting, sculpture, or architectural work, the author still retains certain rights over the painting, sculpture, or architectural work. The rights retained by the artist, particularly the

---

[148] Judgment of 28 May 1991, Cass. civ. 1re, 1991 Bull. Civ. I 113).

[149] *Snow v. The Eaton Centre Ltd.* (1982) 70 C.P.R. (2d) 105.

[150] *Fahmy v. Carter*, 788 F.Supp.2d 1072, 99 U.S.P.Q.2d 1352 (C.D. Cal., 2011).

right of integrity, *may* limit the ability of the owner of the tangible item—the painting, sculpture, or architectural work—to make changes in the manner in which the painting or sculpture is displayed, to make changes to the work's surroundings, and in the case of an architectural work, to make changes to the building or structure in which the architectural work is embodied.

It is useful to consider some of the situations in which conflicts may arise. For example, conflicts may arise where a work is site-specific, such as the *Tilted Arc* case mentioned above, if the owner of the site wishes to remove the sculpture to a different location or make changes to the site where the sculpture is located.

Conflicts may also arise where a work is embodied in or displayed on a building or other structure. It is not uncommon for a painting, mosaic, or bas-relief to be affixed to a wall of a building or other structure. In this situation, renovations or other changes to the building or structure may threaten the integrity of the work. For example, the noted Indian artist Amar Nath Sehga created a mural that was affixed to the walls of the *Vigyan Bhawan*, an important government building. When the building was renovated, the mural was removed in pieces and placed in storage, and parts of the work were reportedly damaged.[151]

Similar conflicts may arise with respect to architectural works where the owner of the work wishes to modify the building or other structure, either for functional or aesthetic reasons. An example of this type of conflict arose in connection with the addition of pedestrian walkway to the Zubizuri Bridge over the Nervión River in Bilbao, Spain. The bridge was originally designed by architect Santiago Calatrava and built as part of an urban regeneration plan. Other buildings, designed by Japanese architect Arata Isozaki, were added as part of the same plan, and the bridge was modified to add a pedestrian walkway connecting the buildings. Mr. Calatrava brought suit for infringement of his moral right of integrity in the bridge and, as relief, demanded damages and removal of the pedestrian walkway. The court found that Mr. Calatrava's rights had been infringed but refused to order the city to remove the pedestrian walkway and granted Mr. Calatrava relatively

[151] This case is discussed at Kalra, Binny, "Copyright in the Courts: How Moral Rights Won the Battle of the Mural," *WIPO Magazine*, April 2007, http://www.wipo.int/wipo_magazine/en/2007/02/article_0001.html.

modest damages.[152] In reaching this decision, the court weighed Mr. Calatrava's interest in the integrity of his work against the public interest in the pedestrian walkway.

Finally, conflicts may also arise when works of visual art deteriorate over time. The works may require expensive and time-consuming preservation or restoration[153] that may interfere with the ability of the owner of the tangible item to display the work or to use the surrounding property. Where deterioration affects the structural integrity of a sculpture or architectural work, the work itself may pose a hazard, and authorities may seek to remove or demolish the work in the interest of public safety.

Litigation over moral rights highlights the differing interests of the owner of the tangible object and the interests of the author or the author's representative. Resolution of such cases may call for a balancing of interests between the party asserting moral rights and the owner of the tangible embodiment of the work. Where modifications to the work affect the public interest, a fair and equitable resolution may require the court to take into account the needs of the public.

INTERNATIONAL PROTECTION OF COPYRIGHT

An author's ability to protect works of authorship abroad depends on the law of the foreign country where protection is desired and the international copyright relations of the author's country. International agreements on copyright give the nationals of countries that are members of the agreements access to copyright protection in other countries that are also members of that agreement, on the terms set out in those agreements. By participating in an international agreement on copyright, a country can provide its authors with the ability to control the exploitation of their works in a number of other countries.

---

[152] The case is summarized at Marín López, Dr. Juan José, "In the Courts: Bridging Moral Rights and Public Utility," *WIPO Magazine*, February 2008, http://www.wipo.int/wipo_magazine/en/2008/01/article_0004.html.

[153] Brancusi's *Endless Column*, a metal sculpture rising nearly 30 meters, required structural repairs. Restoration reportedly took four years to complete at a cost of $1.2 million, with the expectation that the repair would preserve the column for perhaps another 40 years. McNeil, Donald G. Jr., "Brancusi's Column Rises To the Height Of Pique; A Sculptor's Gift To His Native Romania Is Gilded in Squabbles," *New York Times*, April 16, 2001.

A number of international agreements create international copyright relations among their members. The broadest international copyright relations can be obtained through membership in the Berne Convention and WTO (through the TRIPS Agreement). As of July 2014, Berne had a total membership of 167 countries, followed by the WTO with a total membership of 160, including some territories and intergovernmental organizations. Membership in these two agreements would give a country copyright relations with 178 other countries. Since, under both Berne and TRIPS, copyright protection inheres without the requirement of complying with formalities, participation in these two agreements expands protection to more than 80 percent of countries comprising 95 percent of the world's population.

COPYRIGHT INFRINGEMENT

Any copying without permission of the author is *infringement* unless it falls into a legal exception or is otherwise excused. Copyright infringement involves two basic types of cases. The first, and most straightforward, is a situation where a person uses all or part of the work of another person without first obtaining permission. The second occurs when a person appropriates a work and adapts it in some manner without first obtaining permission.

In determining whether copyright infringement exists, in both types of cases, the courts will look first at whether the work is subject to copyright, whether the alleged infringer has had access to the original work, and whether there is substantial similarity between the works. These three elements constitute a *prima facie* case of infringement. The existence of a license or a claim that the use was excused constitutes a defense. The plaintiff normally has the burden of showing the elements necessary to establish a *prima facie* case, and the defendant the burden of showing the elements of a defense.

ESTABLISHING A *PRIMA FACIE* CASE

The plaintiff must typically offer evidence of ownership of a valid and unexpired copyright in the work, evidence that the defendant had access to the work, and evidence that there are substantial similarities between the copyrighted work and the alleged copy.

In many cases, a showing of copyright ownership should be the easiest of the elements of a *prima facie* case. The plaintiff should establish either that the work in question was made by the person claiming to be the copyright owner, or that the

plaintiff has rights from or through a person claiming rights from the person who made the work. If the plaintiff is the author, the complaint should recite that the work is the original work of the plaintiff and that the plaintiff owns copyright in the work and offer enough evidence of authorship to establish a *prima facie* showing under the law of the country where enforcement is sought. If the plaintiff is not the originator of the work, it will be necessary to establish ownership by producing an assignment or other evidence that gives the plaintiff the right to bring a suit for infringement. This other evidence might include, for example, an exclusive license providing a right of enforcement or an employment or other agreement that, under the applicable law, would transfer ownership.

In countries that require fixation as a condition of copyright, copyright inheres from the time the work is fixed in a tangible medium until the expiration of the term, based on the life of the author, the date the work was made available to the public with consent of the author, or the date the work was made, as appropriate to the circumstances. (Berne Article 7) To establish that the term would not yet have expired, the plaintiff can establish the author and either show that the author is still living or, if the author is deceased, establish the author's date of death. Where the term is calculated on the basis of making the work available to the public or the date of making the work, by providing evidence of the date on which those events occurred. For countries that are members of the Berne Convention, no formalities can be required to obtain copyright, so no further formalities—such as filing an application—are necessary to establish that a valid copyright exists.

The plaintiff also must show that the defendant had access to the work and that there are substantial similarities. Substantial similarity is shown by comparing the works. The arrangement of the parts of the work, the use of common language or settings, and the replication of errors are factors to be considered in determining whether copying has occurred. The replication of errors in spelling or typography, or of other types of errors, is strong evidence of copying.

The more substantial the amount of copying, the easier it will be to demonstrate that copying occurred and that the copying was an intentional act. In cases where the alleged copying consists of reproducing portions of another's work, the task of identifying copied material is tedious but straightforward.

In some cases, a showing of substantial similarity may justify an inference that the alleged infringer had access to the work. This principally applies when the copying is exact or the amount of copied material is large in relation to the whole. This is based on the common sense observation that authors may independently create

works that contain some identical or highly similar elements, but that the probability of independent creation decreases as the number of identical or virtually identical elements increases. This is, of course, not an absolute criterion for judging whether a work is copied, as the form of compilations of factual material, such as a telephone directory or city directory, may largely be dictated by practical considerations.

Copying may also occur without a slavish reproduction of all or portions of the work. If copying is more subtle, the plaintiff may need to offer an analysis of such factors as plot and characterization, or the look and feel of the work.

A second type of copyright infringement involves the adaptation right. In this case, the issues will revolve around whether the allegedly infringing work relied on the work adapted. Common situations involve the production of a movie or play from a book, or a movie from a play, or use of a song in a video. Unauthorized translation is another common example. It is also possible for a three-dimensional work to infringe a two-dimensional work or the reverse—for example, a sculpture that copies a photograph, a dress made from a dress pattern, a building built from architectural plans, or a toy that reproduces a cartoon figure.

Cases of copyright piracy may not require particular expertise to determine infringement because of the identical, or nearly identical, nature of the copying. In the case of computer programs, the copying may not be easy for a layperson to discern, and expert assistance may be useful.

DEFENSES TO COPYRIGHT INFRINGEMENT

The principal defenses to a charge of copying are the following:

- **No copying occurred, as the work is the result of original effort**. A defendant who relies on this defense should be prepared to demonstrate that the work was made independently of the work alleged to be infringed. Proof in such cases will be basically the same as that offered by the plaintiff in making a *prima facie* case. However, the more substantial the amount of material that exists in common between the two works, the greater the burden on the defendant. Even though the burden of proving infringement rests with the plaintiff, the defendant should be prepared to demonstrate that the allegedly infringing work was in fact made independently.

Since copying need not be intentional to be actionable, simply showing independent effort may not be sufficient, especially if the defendant might have had access to the allegedly infringed work. Unintentional infringement can occur, for example, if the defendant heard a piece of music and later prepared a piece that unconsciously copied the earlier work.[154] However, if the defendant can show that the alleged copy was made before the making of the original, or at least before its publication or other date on which the defendant might have gained access to it, then no copying can have occurred.

Another situation in which this defense might be pertinent is one where both authors draw on the same sources. In such a case, the allegedly infringing work may contain substantial amounts of material that is common to the work alleged to be infringed. In this situation, however, the defendant should be able to demonstrate differences in the form of expression of the two works.

- **The work alleged to have been infringed was not protected under copyright at the time of the copying**. Ordinarily, a work that has been fixed in a tangible medium of expression is subject to copyright, but there are circumstances when a work may not be protected by copyright. Copyright has a fixed term—usually life of the author plus fifty years—so copyright may have lapsed for an old work. In some non-Berne countries, or countries that were not members of Berne at the time the work was made or published, copyright may have lapsed immediately, or the work may never have been protected, because of failure to comply with formalities. Although the Berne Convention does not require countries to restore rights to works that have entered the public domain at the time a country adheres to Berne (Berne Article 18), and the TRIPS Agreement adopts those same provisions (TRIPS Article 70.3).

---

[154] *See, e.g., Bright Tunes Music v. Harrisongs Music*, 420 F. Supp. 177 (S.D.N.Y. 1976), holding that former Beatle George Harrison's "My Sweet Lord" infringed "He's So Fine," composed by Ronald Mack and recorded by The Chiffons, even though the copying was unintentional and accomplished subconsciously. The trial court opinion includes the court's analysis and is available online at http://www.law.berkeley.edu/files/Bright_Tunes_Music_v_Harrisongs.pdf, accessed July 13, 2014.

A more limited instance of this defense may apply where the work is subject to copyright but the copied portions are not. Since copyright protection extends only to the form or arrangement of a work and not to the facts or ideas contained therein, a person might use factual information from a copyrighted source to produce another work that is not substantially similar to the original work. In such cases, the court must consider whether use of the original material constitutes the making of a derivative work.

In each of the following examples, consider whether the second directory is a copy, that is, a derivative work, or whether it is an original work incorporating material that is not protected by copyright:

> **Example 1**: A telephone directory provides an alphabetical listing of the names of subscribers, together with their addresses and telephone numbers. A person uses that directory as the sole source for a reverse directory in which telephone numbers are given in numerical order, together with the name and address of the subscriber.
>
> **Example 2**: Another person creates a directory of addresses in a geographical area. Addresses are compiled from a variety of sources, and names and telephone numbers of residents are matched to addresses by using the telephone directory to verify the information.

- **The work was copied, but the copying is permitted**. If copying has occurred, a court should determine whether the copying is excused. Most countries recognize some permissible uses of copyrighted material without permission of the author. Most agree that it is reasonable to copy brief portions of a work. Most also give greater latitude to copying for certain purposes, such as scholarly purposes, news reporting or literary criticism, than to copying for commercial gain.

  Copying may also be permitted pursuant to an exclusion from copyright protection. For example, in countries where certain government works such as court opinions or statutes are not protected under copyright law, a person is entitled to quote extensively or even reproduce entire documents. In certain very narrow cases, copying may be permitted pursuant to a compulsory license, such as the translation license for developing countries permitted under an Appendix to the Berne Convention in a country that has deposited its notification that it will avail itself of the

ability to use these licenses. Finally, copying is excused if done with permission from the copyright owner.

EVALUATING INFRINGEMENT CLAIMS

Whether infringement has occurred depends on whether the defendant has copied all or a portion of a work protected by copyright and whether the copying is a permitted use. Under U.S. law (17 U.S.C. 107), factors to consider in deciding whether the copying is permitted include

> (1) the purpose and character of the use, including whether such use is of a commercial nature or is for nonprofit educational purposes;
>
> (2) the nature of the copyrighted work;
>
> (3) the amount and substantiality of the portion used in relation to the copyrighted work as a whole; and
>
> (4) the effect of the use upon the potential market for or value of the copyrighted work [and]
>
> (5) whether the copied material is taken from a published or unpublished work.

These "fair use" factors serve as a defense to a charge of copyright infringement. Applying these factors, short quotations are more likely to be permitted than long quotations. Quotation of factual material is more likely to be permitted than quotation of nonfactual material. A nonprofit or scholarly use is more likely to be permitted than a use for profit. However, none of these factors will excuse copying that destroys the market for the original work. Quotation from an unpublished work is held to a higher standard than a quotation from a published work and in some countries may not be considered a fair use under any circumstances. U.S. law provides that "[t]he fact that a work is unpublished shall not itself bar a finding of fair use if such finding is made upon consideration of all the above factors." (17 U.S.C. 107)

These factors require a balancing of interests: a literary critic may quote a small portion of a fictional or dramatic work in order to illustrate the style of the work, even though the review will appear in a for-profit newspaper. On the other hand, copying a substantial amount may replace the market for the original work. Most importantly, copying that replaces the market for the original work can rarely be

considered as a permitted use, even if the portion copied is small relative to the size of the work.

Determining the amount and substantiality of copying that constitutes a fair use can be a complex issue. Copying only a small portion of a work is more likely to be permissible use than copying a large amount. However, the question of whether a substantial amount has been copied should not be determined strictly on the basis of the percentage of work that is copied. Rather, it should take into account the economic effect of the copying. For example, publishing a brief but particularly newsworthy segment of a book may destroy the market for the book, even though the copied material is only one or two pages out of several hundred. *See*, e.g., *Harper & Row Publishers, Inc. v. Nation Enterprises*, 471 U.S. 539 (S.Ct. 1985),. In this case, the U.S. Supreme Court considered the situation where a newspaper published only a small portion of the memoirs of former U.S. President Gerald Ford. About 300 words out of a 20,000-word manuscript were copied verbatim, and the copied material was considered newsworthy. However, the memoirs were unpublished at the time of the publication by *The Nation*, and the portion it copied was the portion of greatest interest, so that a person who read the copied work had less incentive to purchase the original. On those facts, the U.S. Supreme Court held the copying to be infringing.

It is also important to exercise some care in determining exactly what constitutes the copied work. Copying a photograph, drawing, poem, table, graph, or essay that is included in a book may appear to be a small fraction of the whole—perhaps only part of one page out of several hundred. However, each photograph, drawing, poem, table, graph, or essay is a separate work of authorship, so that the copied portion represents 100 percent of the whole.

The TRIPS Agreement (Article 13) requires that any “limitations or exceptions to exclusive rights” must be confined “to certain special cases which do not conflict with a normal exploitation of the work” or unreasonably prejudice the owner. Berne Convention Article 9 includes a similar restriction on limitations and exceptions to the right of reproduction. It is therefore unlikely that broad exceptions or limitations in a national copyright law will be consistent with the Berne Convention or the TRIPS Agreement.

There are no simple rules concerning the percentage of a work that can be copied without infringement, other than the observation that copying of 100 percent of a work is unlikely to be held to be within the permissible range of quotation. Finally, any use of copyrighted material should include mention of the source of the

material and, if the author's name appears on the source, the name of the author. (Berne Article 10(3))

COPYRIGHT AND OTHER FORMS OF PROTECTION

When protection is needed, it is not necessarily clear which form of protection is best suited to a particular product. In some cases, this issue is resolved by international agreement, while in others, there may be variations in the approach taken by different countries. For computer programs, the TRIPS Agreement provides that computer "[c]omputer programs, whether in source or object code, shall be protected as literary works under the Berne Convention (1971),"[155] and that "[c]ompilations of data or other material, whether in machine readable or other form, which by reason of the selection or arrangement of their contents constitute intellectual creations shall be protected as such. Such protection, which shall not extend to the data or material itself, shall be without prejudice to any copyright subsisting in the data or material itself."[156]

By contrast, the TRIPS Agreement recognizes the possibility of different ways of protecting some items, as it requires WTO Members to provide protection for textile designs, either "through industrial design law or through copyright law," and to ensure that requirements for securing this protection, "in particular in regard to any cost, examination or publication, do not unreasonably impair the opportunity to seek and obtain such protection."[157] In some cases, *sui generis* protection may be established to address needs not fully met by copyright, patent, or other established forms of protection. This occurred with integrated circuit topographies, which were originally addressed under copyright law in some countries but are now often addressed through a special integrated circuit topography law, and continues to occur as needs are recognized in other areas.[158]

---

[155] TRIPS Article 10.1. "Berne Convention (1971)" refers to the Berne Convention for the Protection of Literary and Artistic Works revised at Paris on July 24, 1971. Like many agreements, the Berne Convention has been revised a number of times since it was first adopted in 1886.

[156] TRIPS Article 10.2.

[157] TRIPS Article 25.2.

[158] *See, e.g.*, the Vessel Hull Design Protection Act, a U.S. law that grants a ten-year term of protection for the original designs of the hull, or shape, of watercraft and the plugs or molds used to manufacture the hull. Under this law, protection is not available to any design that is the subject of a U.S. design patent (the means by which industrial designs are protected in the United States).

Sometimes more than one form of protection may be suitable. *Trade dress* may be protected in various countries under unfair competition law without registration, or by registering the appearance of the packaging as an industrial design, while text and graphical elements of the trade dress may be protected under copyright law. Technical drawings, technical manuals, or confidential business information may be protected both as a trade secret and under copyright law. Each of these forms of intellectual property provides different protection to the owner. A product should have the benefit of each form of intellectual property that applies.

NEIGHBORING RIGHTS

Neighboring rights (also called *related rights*) protect the rights of performers, producers of phonograms (sound recordings), and broadcasting organizations. *Phonograms* are sound recordings such as audiotapes, records, or music CDs.[159] Some of the problems addressed by Article 14 of the TRIPS Agreement include the unauthorized copying or broadcasting of live performances and the unauthorized reproduction of recordings or of radio and television broadcasts. Under the TRIPS Agreement, WTO Members must provide a legal means by which performers, broadcasters, and producers of phonograms can prevent such acts except with their authorization.

Berne Article 11 reserves to authors of dramatic works, dramatico-musical works, and musical works the exclusive right to authorize their public performance or communication to the public, and the same rights with regard to any translations of their works. Berne Article 11*bis* provides that authors of literary works have the exclusive right to authorize the "broadcasting of their works by … wireless diffusion of signs, sounds, or images" or "communication to the public of their works by wire or by rebroadcasting" by another organization, "public communication by loudspeaker" or similar methods and permission to broadcast does not include permission to record the work broadcast. Article 11*ter* provides that authors of literary rights also have the exclusive right to authorize their public recitation, "any communication to the public of the recitation of their works," and "the same rights with respect to translations" of their original works. Berne Article

---

Although clearly a *sui generis* form of protection, this provision was incorporated in a revision to the copyright law and is administered by the Copyright Office.

[159] Sound recordings may be protected by copyright.

12 provides that "[a]uthors of literary or artistic works shall enjoy the exclusive right of authorizing adaptations, arrangements and other alterations of their works."

The term of protection for neighboring rights for performers and producers of phonograms must be at least 50 years "from the end of the calendar year in which the fixation was made or the performance took place," or for broadcasters, "at least 20 years from the end of the calendar year in which the broadcast took place." (TRIPS Article 14)

COPYRIGHT AND NEIGHBORING RIGHTS DISTINGUISHED

Copyright and rights related to copyright protect similar interests. Public performance of a dramatic work requires permission of the author under copyright law, but the performer, who has also invested time, talent, and other resources to refine his or her performance, has the related right to prevent others from making a recording of the performance without his or her permission. The author of a musical work can rely on copyright to prevent others from making copies of that work without the author's permission. Once that permission is given, the producer of a sound recording must invest time and resources to secure the right to make the recording and the skill, technical resources, and money to make and edit a high quality recording. The producer of sound recordings thus needs the protection provided under related rights to prevent others from making unauthorized copies of that sound recording. A broadcast organization must either produce works for broadcast or take steps to secure rights to broadcast works produced by others and therefore also needs protection against unauthorized recording or rebroadcast of broadcasts.

10 INTEGRATED CIRCUIT TOPOGRAPHIES

An *integrated circuit* is an electrical circuit constructed in miniaturized form on a wafer or chip. By permitting electronic items to be produced in a smaller form, these devices make it possible to construct a calculator or telephone that will fit in a pocket or purse, a computer that will fit on a desk or in a laptop, or a telephone that can be programmed to remember telephone numbers. Integrated circuits are used in a wide range of items, from sewing machines to the space shuttle, and are a mainstay of the modern electronics industry.

An integrated circuit is formed when an electrical circuit is embodied in a chip. Circuits for modern electronic items are complex and may contain literally thousands of elements. These elements are arranged in a manner that permits the circuit to fit into a tiny volume. This is accomplished by etching the circuit into a substrate, using a template or mask designed for that purpose, and building up the design layer by layer to form a chip. In the terms of the Treaty on Intellectual Property in Respect of Integrated Circuits[160] (IPIC Treaty), an *integrated circuit* is "a product, in its final form or an intermediate form, in which the elements, at least one of which is an active element, and of some or all of the interconnection are integrally formed in and/or on a piece of material and which is intended to perform an electronic function."[161] The IPIC Treaty defines a "layout-design (topography)" as "the three-dimensional disposition, however expressed, of the elements, at least one of which is an active element, and of some or all of the interconnections of an integrated circuit, or such a three-dimensional disposition prepared for an integrated circuit intended for manufacture."

The circuit itself may or may not be new. It is the arrangement of the circuit in this miniaturized form, and the mask for creating a chip embodying that arrangement, that are the subjects of protection. An *integrated circuit topography*, also known as a *layout design*, *semiconductor chip*, or *mask work*, is the three-dimensional

[160] This treaty was adopted at Washington on May 26, 1989, but it did not come into force. Egypt was the only country that ratified this treaty

[161] IPIC Treaty Article 2(i).

disposition, however expressed, of the elements, at least one of which is an active element, and of some or all of the interconnections of an integrated circuit, or such a three-dimensional disposition prepared for an integrated circuit intended for manufacture.[162]

PROTECTION OF INTEGRATED CIRCUITS

TRIPS Article 35 requires WTO Members to protect *integrated circuit topographies* or *layout-designs* in accordance with certain provisions of the IPIC Treaty.[163] These provisions require protection of integrated circuits regardless of whether the integrated circuit is incorporated in an article.[164]

IPIC Treaty Article 3(2) requires that integrated circuits be protected if they are "original in the sense that they are the result of their creators' own intellectual effort and are not commonplace among creators of layout-designs (topographies) and manufacturers of integrated circuits at the time of their creation." However, if the topography consists of a combination of elements and interconnections that are commonplace, it is to be protected only if the combination, taken as a whole, fulfills the conditions of being original and not commonplace among creators and manufacturers of integrated circuits. Article 4 of the IPIC Treaty provides that this protection may be met through a special law on layout-designs (topographies) or through a country's copyright, patent, utility model, industrial design, or unfair competition law, or through any other law, or a combination of any of those laws.

IPIC Treaty Article 5 provides for national treatment and extends the provisions of the Treaty to intergovernmental organizations.

SCOPE OF PROTECTION

TRIPS Article 36 requires WTO Members to make it unlawful to import, sell, or otherwise distribute for commercial purposes "a protected layout-design, an integrated circuit in which a protected layout-design is incorporated," or an article

---

[162] IPIC Treaty Article 2(ii).

[163] WTO Members are required to protect integrated circuits in accordance with the provisions of Article 1-7 of the IPIC Treaty, except for Article 6 paragraph 3, which concerns use without authorization of the owner.

[164] IPIC Treaty Article 3(1).

incorporating such an integrated circuit only in so far as it continues to contain an unlawfully reproduced layout-design, if those acts are "performed without the authorization of the right holder." This is consistent with the provisions of IPIC Treaty Article 6(1).[165]

LIMITATIONS ON RIGHTS OF OWNERS

Article 6(2) of the IPIC Treaty creates a mandatory exception to the rights of owners for reproduction "performed for private purposes or for the sole purpose of evaluation, analysis, research or teaching." It also creates a mandatory exception for new developments based on reverse engineering, that is, the situation where a person creates a second topography "on the basis of evaluation or analysis of the protected topography." If that second topography complies "with the requirement of originality," the maker of the second topography is permitted to incorporate it "in an integrated circuit or perform any of the acts" reserved to the owner "in respect of the second [topography] without being regarded as infringing the rights of the holder of the right in the first [topography]."

TRIPS Article 37 limits the owner's rights with regard to the sale and distribution of integrated circuits that were innocently acquired. Full protection is limited to situations where a person performing one of the acts requiring authorization of the owner "did not know and had no reasonable ground to know" that he or she was acquiring an integrated circuit incorporating an unlawfully reproduced layout-design or any article incorporating such an integrated circuit. This is a mandatory exception, as WTO Members are prohibited from treating such acts as unlawful in

---

[165] IPIC Article 6(1) provides:

> (a) Any Contracting Party shall consider unlawful the following acts if performed without the authorization of the holder of the right:
>
> > (i) the act of reproducing, whether by incorporation in an integrated circuit or otherwise, a protected layout-design (topography) in its entirety or any part thereof, except the act of reproducing any part that does not comply with the requirement of originality referred to in Article 3(2),
> >
> > (ii) the act of importing, selling or otherwise distributing for commercial purposes a protected layout-design (topography) or an integrated circuit in which a protected layout-design (topography) is incorporated.
>
> (b) Any Contracting Party shall be free to consider unlawful also acts other than those specified in subparagraph (a) if performed without the authorization of the holder of the right.

those situations. A person who innocently receives a protected integrated circuit or article that incorporates it may later receive notice that the layout-design was unlawfully reproduced. Even after the person who innocently acquired the item receives this later notice, that person is permitted to continue to exploit the item "with respect to stock on hand or ordered before" that person had such notice. However, the person who innocently acquired the items must be "liable to pay the owner an amount equivalent to a reasonable royalty such as would be payable under a freely negotiated license" for a layout-design.

TRIPS Article 31 recognizes the possibility that a Government may authorize use of protected subject matter without the authorization of the owner. Where the subject matter concerns semiconductor technology, TRIPS Article 31(c) requires that such government authorization be limited to "public non-commercial use or to remedy a practice determined after judicial or administrative process to be anti-competitive." TRIPS Article 37.2 applies the conditions of subparagraphs (a) through (k) of TRIPS Article 31(concerning non-voluntary licensing of patented inventions) *mutatis mutandis* to any non-voluntary licensing of a layout-design or to its use by or for the government without the authorization of the right holder.

Article 6(5) of the IPIC Treaty gives countries an option of providing for exhaustion of rights when any of the acts requiring the authorization of the owner is performed in respect of a protected topography, or in respect of an integrated circuit in which such a topography is incorporated, "that has been put on the market by, or with the consent of, the holder of the right."

Finally, Article 7 of the IPIC Treaty permits countries to set certain conditions for the protection of integrated circuits. A country may choose not to protect a topography "until it has been ordinarily commercially exploited, separately or as incorporated in an integrated circuit, somewhere in the world." A country is also permitted to condition protection on the registration of the topography or the filing of an application for registration. Countries may require the application to be accompanied by "a copy or drawing of the topography and, where the integrated circuit has been commercially exploited, by a sample of that integrated circuit, along with information defining the electronic function which the integrated circuit is intended to perform." The applicant must be permitted to exclude portions of the copy or drawing "that relate to the manner of manufacture of the integrated circuit, provided that the parts submitted are sufficient to allow the identification" of the topography.

Countries that require the filing of an application for registration may also fix a time period within which the filing must be made. This period is to be figured from the date on which the owner first ordinarily commercially exploits the topography anywhere in the world and must not be less than two years from that date. Registration may be made subject to the payment of a fee. (Article 7)

TERM

TRIPS Article 38 sets a minimum term of protection. Where registration is a condition of protection, the term must be not less than “10 years counted from the date of filing” the application or not less than ten years from first commercial exploitation anywhere in the world. WTO Members that do not require registration as a condition for protection must provide a term of not less than 10 years from the date of the first commercial exploitation anywhere in the world. Notwithstanding these requirements, a WTO Member may provide for protection of the topography to lapse 15 years after the date the topography was created.

11 MARKS

A mark, sometimes called a brand name, is a device used to indicate the source of goods or services, that is, who made or sold the goods or who provided the services. A mark can also be used to indicate the affiliation or qualifications of the person who made the goods or provided the services, or to indicate that goods possess certain qualities or characteristics. Any sign, or any combination of signs, capable of distinguishing the goods or services of one undertaking from those of another is capable of constituting a mark.[166]

A mark is most often a word, slogan, name, symbol, letter or group of letters, design, picture, or some combination of these. A mark can also be the shape of a product or of its packaging. Some countries recognize that a mark can be a sound or even a scent used in connection with goods, while other countries limit their protection to marks that are visually perceptible.

Marks are not limited to signs that refer to the goods or services themselves. It may be useful to coin a slogan or short phrase for use in marketing the goods or services, and trademark protection should also be available for these slogans.

The term *trademark* traditionally refers to a mark that is used on goods, as compared with the term *service mark* for a mark used in connection with services. However, *trademark* is now commonly used to include marks used in connection with services.

Trademark owners have great latitude in choosing their marks. However, this latitude is limited by the public interest in preventing confusion, mistake, and deception. The ability to develop a mark that identifies the producer or provider of goods and services allows consumers to identify goods they wish to purchase. This encourages merchants to offer more desirable goods and services and promotes competition, both of which are socially and economically desirable.

---

[166] TRIPS Article 15.1.

FUNCTION OF A MARK

The basic function of a mark is to identify the source of goods or services. The use of a mark in connection with goods or services indicates that they were either produced or provided by the owner of the mark, or that they were produced or provided under the supervision of the owner of the mark and to the standards of the owner. A potential purchaser can reasonably expect goods or services identified by a particular mark to be of the same quality, regardless of where they are purchased.

Identification of the source of goods or services is an important social and economic function. It allows consumers to act on their preferences—to purchase products they have found satisfactory in the past, or that are recommended to them by others, or to avoid purchasing a brand that has proved unsatisfactory. The ability to identify the source of services permits consumers to engage service providers that have developed a good reputation—and to avoid those whose reputation is less good.

Without marks to identify source, consumers have limited means to exchange information about products or services and those who provide them. In this situation, consumers' access to information about products and services is typically limited to personal names and locations—the name of the seller, who may or may not be known to the consumer, and where the seller does business, if the seller has a fixed location.

The ability to identify the source of goods and services is useful for producers of goods, providers of services, and merchants who offer those goods or services. Because the mark identifies who made or provided the goods or services, businesses can use marks to develop a reputation for price, quality, or some other characteristic that consumers want. This type of reputation helps a business attract more customers, adding to its profitability and to the overall value of the business.

Identifying the source of goods and services also benefits society by promoting quality and accountability. By allowing customers to identify merchants who provide better quality, the trademark system allows consumers to reward those merchants with greater customer loyalty and increased sales.

The trademark system also helps to address the problem of dangerous or substandard goods or services, or goods or services that are provided in a deceptive manner. Being able to identify the producer or provider of goods or services helps make merchants accountable for the goods or services they offer.

The ability to identify the source of objectionable goods is a necessary first step to empower the legal system to provide a remedy for a consumer who has been harmed by unfair or harmful practices, to remove such goods or services from the market, and perhaps to take steps such as closing production to prevent further harm.

CHOOSING A MARK

In choosing a mark, a business should choose an indication that will become distinctive of its goods or services. *Distinctive*, in trademark terms, means that the mark distinguishes the owner's goods and services from those of others. Many indications are capable of distinguishing the source of goods or services, but the strongest are those that are arbitrary or fanciful.

A *fanciful* mark is one that consists of a sign—a word, name, symbol, or graphical element—that is commonly used but does not suggest or describe anything about the goods or services associated with the mark. For example, a seahorse is an animal, but when used in connection with spectacles, as is the case with the mark shown here, it functions as a fanciful mark. An *arbitrary* mark is one that has no meaning and is created for the sole purpose of functioning as a mark. An example of arbitrary mark is EXXON®, a term that has no meaning and was created to provide a strong mark for an oil company.

Businesses sometimes wish to choose a mark that lets consumers know the nature of the goods or services they offer. It is a mistake to choose a mark that is the generic name for the goods or services, or that is merely descriptive of the goods or services, or of the business that offers them, or of the geographical area from which the goods originate or where the business is located, because such marks cannot be distinctive of the owner's goods and services.

It is also a mistake to choose a name that is likely to deceive consumers as to the nature of the goods or services, as to who produced the goods or provided the services, or as to their qualities or characteristics or their geographical origin. Such characteristics make a mark unprotectable on grounds of deceptiveness.

Another consideration in choosing a mark is to avoid selecting a functional feature of goods or their packaging. Such features are more properly the province of patents.

Example: A business packages its product in a bottle with a particular type of cap. The business advertises the use of the cap as a distinctive feature to help consumers distinguish its products from those of other producers. If this cap performs a function, for example, if it is easier to open or less likely to leak, the company cannot protect the design under trademark law. If the cap's only role is to provide a distinctive appearance that consumers can easily identify, it may be protectable as a trademark.

PROTECTING A MARK

A mark is a form of property that has value and should be protected. Marks are a measure of the goodwill of a business, that is, the value of a business that is not attributable to its tangible assets. Often, the value of a mark can be increased by promotional activities that allow the mark to achieve broader customer identification. In many cases, a company's trademarks are among its most valuable assets. As with other forms of property, rights to a mark can be owned or transferred.

In most countries, a person obtains ownership of a mark by registering it. This is accomplished by filing an application in the trademark office, where the application is reviewed for compliance with the law. Many, but not all, applications result in registration of the mark. Marks are protected for use in connection with the goods or services specified by the applicant in the trademark application and approved by the trademark office.

Registration gives the registrant the legal right to the exclusive use of the mark in connection with the goods or services listed in the registration.

In a few countries, notably those with a common law system, rights in a mark are obtained by using the mark in commerce. Even in countries where ownership is acquired by use of the mark, registration serves as legal notice of ownership and may confer other important legal rights. Where rights are obtained by use, the trademark applies to the goods or services in connection with which the owner actually uses the mark.

A few countries require use as a condition of registration. Even in those countries, however, WTO Members cannot make actual use of a mark a condition for filing

an application for registration.[167] In those countries, an applicant could wait to file an application until after using the mark in commerce or, alternatively, could file the application before actually using the mark and file the application with a statement that the applicant intends to use the mark as described in the application. In the latter case, the applicant would need to meet the use requirement sometime before obtaining the registration.

Ideally, trademark registration should be accomplished early since applicants run the risk that another party may wish to register the same mark. Not only is it important to register the mark promptly in the applicant's home country, foreign registrations should be accomplished promptly as well.

PRIORITY

An applicant who files a trademark application abroad may wish to claim priority under the Paris Convention[168] or TRIPS Agreement.[169] An application filed in a foreign country during the priority period is treated as though it were filed on the same date that the original application was filed. This is useful when more than one applicant applies to register the same mark, a situation that occurs with some frequency.

For trademark applications, the priority period is six months[170] from the date on which the first application was filed in a Paris country or WTO Member. This period applies even if the actual registration of the mark in the country of origin occurs after the end of the priority period.[171] Applicants should adhere strictly to this date, and there is no provision under international law for extending the priority period. An applicant can still file abroad after the priority period has expired but runs the risk that another party may have registered the mark, or otherwise acquired rights, in the interim.

---

[167] TRIPS Article 15.3.

[168] Paris Convention Article 4.

[169] TRIPS Agreement Article 2.

[170] Paris Convention Article 4C(1).

[171] Paris Convention Article 6*quinquies* F.

INTERNATIONAL PROTECTION OF MARKS

To protect a mark in more than one country, an applicant can file applications in each country where protection is desired. The applicant must meet the requirements of each country. Typical requirements include the use of an approved form, payment of fees, translation of the application and accompanying documents into a language used on the country where the application is being filed, and the appointment of a local agent.

A mark registered in one country is independent of marks registered in other countries that are members of the Paris Convention or WTO, including the mark's country of origin.[172] Thus, a mark could be registered in one country but not in another, or owned by one party in one country and by another party in another country.[173]

Trademark registration cannot be refused or invalidated in a Paris Convention country or WTO Member[174] on the ground that the mark has not been applied for, registered, or renewed in the applicant's country of origin.[175] However, a trademark that *has been registered* in its country of origin must be accepted for filing and must be protected in other countries that are members of the Paris Convention[176] or WTO.

Paris Convention Article 6*quinquies* (b) provides that a trademark that has been registered in its country of origin cannot be denied registration or invalidated except in certain circumstances. These can be summarized as follows:

- The trademark would infringe third-party rights "in the country where protection is claimed;"
- Trademark protection is not available because the mark

---

[172] Paris Convention Article 6(3).

[173] Well-known marks must be protected in Paris Convention countries and WTO Members even without filing or registration and may be a ground for refusing registration.

[174] Paris Convention provisions apply to WTO Members by virtue of TRIPS Article 2.1, requiring Members to comply with Articles 1-12 and 19 of the Paris Convention.

[175] Paris Convention Article 6.

[176] Paris Convention Article 6*quinquies.* Countries where protection is desired may require the production of a certificate of registration in the country of origin, issued by the competent authority, but no authentication can be required for this certificate.

— Is “devoid of any distinctive character” or

— Consists “exclusively of signs or indications that” may serve, in trade, to designate the kind, quality, quantity, intended purpose, value, place of origin, of the goods, or the time of production, or

— Has “become customary in the current language or in the *bona fide* and established practices of the trade of the country where protection is claimed;” or

- The mark is “contrary to morality or public order[177] and, in particular, of such a nature as to deceive the public.”

In some cases, a business may register a mark in one form in one country and then use the mark in a slightly different form in another country. In that situation, the Paris Convention prohibits the refusal of registration where the mark submitted for registration differs from the mark protected in the country of origin only “in respect of elements that do not alter its distinctive character and do not affect its identity in the form in which it has been registered”[178] in the country of origin.

CONVENTIONS THAT FACILITATE INTERNATIONAL FILING

Instead of filing separate trademark applications in many countries, some applicants find may wish to take advantage of international conventions that facilitate filing in multiple countries. Options may include filing under a regional system of protection. For example, the Bangui Agreement (Bangui Agreement Relating to the Creation of an African Intellectual Property Organization, Constituting a Revision of the Agreement Relating to the Creation of an African and Malagasy Office of Industrial Property (Bangui (Central African Republic), March 2, 1977)) simplifies the process of protecting trademarks in 19 African countries, since filing the application with any of the Bangui member states or

[177] A mark cannot be considered contrary to public order solely because it does not conform to a provision of legislation on marks except where the provision itself relates to public order. In addition, this provision is subject to Paris Article 10*bis*, which requires countries to prohibit acts of unfair competition.

[178] Paris Convention Article 6*quinquies* C(2).

with the *Organisation Africaine de la Propriété Intellectuelle* (OAPI) is equivalent to a national filing in each of the 17 member states of that agreement.[179]

A similar system of protection is created under the Lusaka Convention of 1976, which established the African Regional Industrial Property Office (now the African Regional Intellectual Property Office. Under that Convention, the Banjul Protocol on Marks Within the Framework of the African Regional Industrial Property Organization allows an applicant to obtain trademark protection in the nine countries that are members of that agreement, either by filing an application with one of the national offices of those countries or with the African Regional Intellectual Property Organization, and designating the states in which the applicant wishes to have the mark protected.[180]

Protection can be obtained in the European Union (EU) through the Office for the Harmonization in the Internal Market (OHIM), the EU agency responsible for registering trademark and industrial designs. By filing a single application with OHIM, an applicant can secure a Community Trade Mark that is effective in all 28 members of the EU.

The existence of a regional framework does not necessarily create the possibility of regional filing. For example, Andean Decision 486 creates a common set of legal requirements for protection of marks in the countries of the Andean Community but does not provide a central filing procedure. Although registration in one Andean country but does not automatically extend protection throughout the other Andean countries, Decision 486 takes several steps toward the establishment of Community-wide protection of marks. For example, a mark can be refused registration on the basis of an objection that the mark is confusingly similar to a trademark previously registered in any Andean Community member country,[181]

---

[179] Bangui Agreement Article 7(1). The Bangui Agreement can be downloaded from http://www.oapi.int/index.php/en/aipo/cadre-juridique/accord-de-bangui, accessed July 25, 2014.

[180] *See*, http://www.aripo.org/index.php/about-aripo/legal-framework, accessed July 25, 2014. A similar system exists for patents through the Harare Protocol, and traditional knowledge and folklore are addressed under the Swakopmund Protocol on the Protection of Traditional Knowledge and Expressions of Folklore. http://www.wipo.int/wipolex/en/other_treaties/details.jsp?treaty_id=294, accessed July 25, 2014.

[181] Decision 486, Article 147.

and a mark is determined to be well known if it is recognized as being well known in any Andean Community member country.[182]

In addition to regional systems of protection, international protection can be obtained by filing an international application under the Madrid system. The Madrid system consists of two separate international agreements, the Madrid Agreement (Marks) and the Madrid Protocol.[183] The Madrid Agreement (Marks) and Madrid Protocol both facilitate the international protection of marks. The agreements have separate memberships and operate in parallel, so that international filing can be accomplished within each agreement only by nationals, domiciliaries, or persons with a "real and effective commercial establishment" in one of the parties to that agreement. (Madrid Protocol Article 2(1)(i) and Madrid Agreement Article 1(3))

An applicant that is a national of a contracting party, or that is domiciled or has a real and effective industrial or commercial establishment in a contracting party, of one of these agreements can accomplish registration in other contracting parties of the same agreement by filing an international application and designating the countries where protection is desired. However, designations may be made only within the membership of the same agreement. That is, membership in the Madrid Protocol does not entitle one to file in a Madrid Agreement (Marks) country, and vice versa. Additional countries can be designated at a later time. International applications under the Madrid system enjoy the right of priority without requiring compliance with the formalities prescribed in Paris Convention Article 4D.[184]

To proceed under the Madrid system, an application must first be filed with the trademark office in the country of origin, that is, the country where the applicant is

---

[182] Decision 486, Article 224.

[183] Madrid Agreement Concerning the International Registration of Marks and the Protocol Relating to that Agreement. The Madrid Agreement Concerning the International Registration of Marks is indicated as Madrid Agreement (Marks) to distinguish it from the Madrid Agreement for the Repression of False or Deceptive Indications of Source on Goods.

[184] Madrid Agreement (Marks) Article 4(2). Paris Article 4D requires any person desiring to claim priority to make a declaration indicating the date and country of filing the application on which priority is based. The applicant may be required to produce any or all of the following: a copy of the previously filed application, certification by the authority that received the application that the application is correct, a certificate from the same authority showing the date of filing, and a translation.

a national or domiciliary or has its industrial or commercial establishment. When the international application includes designations under the Madrid Agreement (Marks), the mark must first be registered in the country of origin. Where all designations are made under the Madrid Protocol, the international application may be based on an application in the country of origin.[185]

The international application is filed with the International Bureau (WIPO) through the trademark office in the country of origin. The International Bureau examines the application for formalities and compliance with the terms of the Madrid Agreement (Marks), Protocol, and Madrid Common Regulations. As part of the formalities examination, the International Bureau examines the list of goods or services and ensures that they are correctly classified in accordance with the Nice Agreement Concerning the International Classification of Goods and Services for the Purposes of the Registration of Marks (Nice Agreement). Substantive examination is conducted by the trademark offices in the designated countries in accordance with their own national laws, but these countries do not re-examine the applications for formal matters. The trademark offices must communicate any objection to the International Bureau within a period fixed under the Madrid Agreement or Madrid Protocol. If no objection is communicated within that period, the International Bureau records the registration in an International Register, publishes the registration, and notifies each designated country.

TERM OF PROTECTION

The term of protection of a trademark is provided under the national law of each country. Although there is variation, it is common to have a term of at least ten years, renewable indefinitely. The TRIPS Agreement requires a term of no less than seven years and requires that "registration of a trademark shall be renewable indefinitely."[186]

---

[185] *See*, "Summary of the Madrid Agreement Concerning the International Registration of Marks (1891) and the Protocol Relating to that Agreement (1989)," http://www.wipo.int/treaties/en/registration/madrid/summary_madrid.html, accessed July 25, 2014. This site provides a good overview of the provisions of the Madrid Agreement (Marks) and the Madrid Protocol. A *Guide to the International Registration of Marks* is also available from WIPO at http://www.wipo.int/export/sites/www/madrid/en/guide/pdf/guide.pdf, accessed July 25, 2014.

[186] TRIPS Article 18.

Even though the term of registration is a fixed period of time, some countries impose additional requirements, and protection may terminate sooner if these additional requirements are not met. To maintain a trademark registration in effect in the United States, for example, a trademark registrant must file an affidavit or declaration of use or excusable nonuse of the mark, together with the applicable fee and documents, between the fifth and sixth years after registration, and again with each renewal application, which must be filed in the final year of each ten-year period thereafter.[187] It is not uncommon for a registrant to overlook such requirements, with the result that the registration is canceled much sooner than the end of the expected term of registration.

The term for an international registration under the Madrid Agreement (Marks) is twenty years,[188] with the possibility of renewal for a period of twenty years from the expiration of the preceding period,[189] provided that the registration of the national mark in the country of origin remains effective at the end of five years.[190] Protection under the international application ceases if the registration in the country of origin ceases to exist within the first five years after the date of the international registration. The ability to invalidate an international registration in multiple countries by invalidating the original registration is sometimes referred to as "central attack," although the invalidation need not be the result of an action filed by a third party.

For an international registration under the Madrid Protocol, the term is ten years,[191] with the possibility of renewal for ten-year periods from the expiration of the preceding period,[192] provided that the registration of the national mark in the country of origin remains effective at the end of five years. As with applications under the Madrid Agreement (Marks), protection under the international

---

[187] U.S. law also provides for a grace period in each case, but subject to payment of an additional fee. This is required by Paris Convention Article 5*bis*, which requires a grace period of at least six months for "payment of the fees prescribed for the maintenance of industrial property rights, subject, if the domestic legislation so provides, to the payment of a surcharge."

[188] Madrid Agreement (Marks) Article 6.

[189] Madrid Agreement(Marks) Article 7.

[190] Madrid Agreement(Marks) Article 6.

[191] Madrid Protocol Article 6.

[192] Madrid Protocol Article 7.

application ceases if the registration in the country of origin ceases to exist within the first five years after the date of the international registration.[193]

CONDITIONS FOR REGISTRABILITY

The conditions for registrability of a mark are set by national law. While those conditions vary somewhat from one country to another, there is considerable similarity in the applicable legal standards. In general, a mark will be registrable if it does not contain elements that are not registrable and if, taken as a whole, it is distinctive of the applicant's goods or services and is not confusingly similar to a more senior mark that is entitled to be protected, taking into consideration the goods or services in connection with which the mark is used. Some countries also require the applicant to have made commercial use of the mark or to allege that the applicant has a *bona fide* intention to use the mark in commerce.

A mark that fails to meet the legal conditions for registrability will be refused registration. Grounds for refusal can be formal or substantive, and substantive grounds can be considered as absolute or relative.

Formal grounds for refusal are those that relate to the completeness of the application for registration and its compliance with procedural requirements, including payment of fees.

Absolute grounds for refusal include, for example, the unauthorized use, as a mark or as an element of a mark, of an armorial bearing, flag, or other state emblem, or of an official sign or hallmark indicating control and warranty.[194]

Relative grounds for refusal include lack of distinctiveness and likelihood of confusion with another mark, discussed below.

A pivotal question in trademark examination is whether the proposed mark is capable of functioning as a mark. Issues to be considered in examination may relate to whether the mark is descriptive or misdescriptive, and to the use of personal names, geographically descriptive or misdescriptive terms, or issues of public policy, among other things.

---

[193] Madrid Protocol Article 6.

[194] *See, e.g.*, Paris Convention Article 6*ter*.

It is important to distinguish between refusal of registration based on the nature of the mark and refusal based on the nature of goods or services to which the mark applies. As provided in TRIPS Article 15.4, registration cannot be denied on the basis of the nature of the goods or services to which a trademark is to be applied. For example, it may be appropriate to refuse registration of a mark on grounds of *ordre public* because the mark itself is scandalous, offensive, or otherwise objectionable, but it would not be permitted to refuse registration because the goods to which the mark is applied, or the services in connection with which they were used, are illegal, scandalous, offensive, or otherwise against public policy. On first impression, these may appear to be contradictory policies. However, they are consistent since trademark ownership creates only the right to prevent others from using the mark in connection with the goods or services associated with the mark and does not authorize the trademark owner actually to conduct the business transactions in which the mark is used.

DESCRIPTIVENESS

Descriptive elements of a mark, and particularly elements that are generic for the goods or services, are generally unregistrable because other businesses need to be able to use those terms in connection with their own marketing. Moreover, since other businesses will be able to include the same descriptive or generic terms in their marks, a mark that relies primarily on descriptive terms is generally not a strong mark.

A *generic* term is one "that the relevant purchasing public understands primarily as the common or class name for the goods or services." [195] (*citations omitted*) Because a generic term is merely the common term for the goods or services, generic terms do not indicate the source of the goods or services.

A mark is *descriptive* (or *merely descriptive*) "if it describes an ingredient, quality, use, intended use, function, or other characteristic of the goods or services in connection with which the mark is used."[196] One common example occurs when a mark is geographically descriptive, either by describing the location of a business or the source of its goods or services.

---

[195] *See*, "Merely Descriptive Marks," TMEP §1209.01(b), from United States Patent and Trademark Office.

[196] *Id*.

A proposed mark that consists solely of generic terms should be refused registration as a trademark so that other businesses can use the term to refer to their goods or services. A descriptive mark should also be refused registration for the same reason.

In determining whether a term is descriptive, one U.S. court observed that "[i]t is not necessary that a term describe all of the purposes, functions, characteristics or features of a product." It is sufficient to hold that a mark is descriptive "if the term describes one significant function, attribute or property" of the goods or services to which the mark pertains. "The determination of whether a mark is merely descriptive must be made in relation to the goods or services for which registration is sought, not in the abstract. This requires consideration of the context in which the mark is used or intended to be used in connection with those goods or services, and the possible significance that the mark would have to the average purchaser of the goods or services in the marketplace."[197] (*citations omitted*)

[197] *Id*., citing *In re Chamber of Commerce*, 675 F.3d at 1300.

EVALUATING MARKS THAT INCLUDE PERSONAL NAMES

A personal name may be the name of an individual, a nickname, or a family name. Public policy favors allowing a person to use his or her own name in business. Granting trademark protection to a personal name may prevent other persons with the same or a similar name from using *their* names in connection with their businesses.

It is not always clear whether a mark consists of, or contains, a personal name. Sometimes this can be ascertained by comparing the name of the applicant or individual who signs a power of attorney with the mark. It may also be helpful to look at listings of names, such as those that are compiled in telephone directories or data bases that can be accessed through the Internet.

A personal name should be refused registration where the name

- Creates a likelihood of confusion with another mark or
- Identifies a person but not the source of goods or services and therefore does not function as a mark.

It may be appropriate to refuse registration if it is reasonable to believe that many people will

- Understand the mark to be nothing other than a personal name, or
- Think of the mark as primarily a personal name, unless the applicant provides convincing information that the mark is distinctive.

Even if a mark includes a personal name, it may still be appropriate to register the mark if the name

- Is uncommon, as shown by relatively few listings, or
- Has other meanings besides the personal name and it is reasonable to believe that many people will think first of the other meaning.

If the mark consists of a personal name plus some other element, consider the mark as in its entirety. Registration should be refused if the overall meaning of the mark is a personal name. Otherwise, it is appropriate to accept the mark for registration. It is not appropriate to divide the mark into parts and refuse registration because one element is a personal name.

EVALUATING MARKS THAT INCLUDE GEOGRAPHICAL TERMS

A geographical term is any name, word, image, symbol, abbreviation, or combination of these that the public could reasonably believe indicates a particular geographic location. The use of geographical terms in a mark may be limited to preserve the rights of other producers or merchants to indicate that their goods or services originate in a particular location, or to prevent the use of misleading or deceptive marks.

To determine whether a mark consists of, or incorporates, a geographical term, it is helpful to review geographical terms found in an atlas, encyclopedia, or on the Internet.

Marks that consist solely of a geographical term

It may be appropriate to refuse registration when the mark

- Merely describes the location of the applicant's business and does not distinguish the applicant's goods or services from those of others,
- Merely describes where the applicant's goods are produced or services are provided and does not distinguish the applicant's goods or services from those of others, or
- Misdescribes the origin of the goods or services and is likely to deceive or mislead the public as to the origin of the applicant's goods or services.

If a geographical term is remote or obscure, consumers are unlikely to be misled by the use of the term, and it may be appropriate to register the mark.

Where the mark also has another meaning, it is appropriate to refuse registration if it is reasonable to believe that members of the public or those engaged in the relevant area of trade are likely to think first of the mark as indicating the origin of the goods or services, unless the applicant provides convincing information that shows the mark is distinctive. If it is likely that the public or members of the relevant area of trade would think first of the non-geographical meaning and would not rely on the mark as indicating the origin of the goods or services, it may be appropriate to accept the mark for registration.

It is inappropriate to divide a mark into parts and refuse registration because one part is a geographical term.

EVALUATING MARKS THAT INCLUDE GEOGRAPHICAL TERMS (CONTINUED)

Marks that include a geographical term and other elements

Where a mark includes other elements, such as additional words or figurative elements, the mark should be evaluated as a whole. If, taken in its entirety, the mark's primary meaning is geographic origin, registration should be refused. If the overall meaning of the mark is not geographic significance, it is appropriate to accept the mark for registration.

Marks that include a geographical indication

Registration should be refused for a mark that consists of a geographical indication, unless the application is made by an appropriate authority.

Where a mark includes a geographical indication, and the goods are of a type for which the geographic region is noted, registration should be refused if the goods

- Do not in fact originate in the region to which the geographical indication applies or
- Do in fact originate in the region to which the geographical indication applies, but the goods do not possess the qualities, characteristics, or reputation associated with the geographical indication and the public is likely to be misled or deceived by the use of the geographical indication in the mark.

In the examples given earlier in this chapter, the word mark "EXXON" is arbitrary and not descriptive of any goods, and the mark "Seahorse," consisting of a word and image, is fanciful as used for spectacles and not descriptive of the goods. Taking the "Seahorse" example, if the goods and services related instead to the manufacture or maintenance of swimming pools, the mark might be suggestive of the goods or services since a seahorse would suggest a relationship to water, but the term would not be descriptive of the goods or services. If, however, "Seahorse" were used as the mark for a store that sold tropical fish and related goods, including seahorses, the mark would be descriptive of at least one of the goods represented by the mark, and therefore registration should be refused. If the store sold tropical fish but did not sell seahorses, and seahorses are normally considered tropical fish, it may be appropriate to refuse the mark as being deceptive.

The fact that a mark contains a generic or descriptive term does not always make the mark unregistrable. The mark may nevertheless be registrable if the applicant disclaims rights to the descriptive terms except in the form used in the mark. A part of a mark is disclaimed by inserting in the trademark registration file a statement, called a disclaimer, that the trademark owner is not asserting trademark rights in a particular word or words or in some other part of the mark, such as an image. The use of disclaimers has the effect of preserving the ability of others to use elements that have been disclaimed. In the same way, a mark may contain one or more generic terms and may still be registrable if the applicant disclaims rights to those terms except as used in the mark as shown. Whether the terms disclaimed are descriptive or generic, if all elements of a mark must be disclaimed, the mark as a whole is unregistrable.

DECEPTIVE MARKS

A business must also be careful not to choose a mark that will mislead the public as to the nature of the goods or services it offers, their characteristics, or their geographical origin. Such marks should be refused registration on the ground that their use in connection with the goods and services is deceptive. The use of a mark that is deceptive may give rise to civil claims and possibly criminal prosecution on grounds of unfair competition.

One type of deceptive mark is a mark that is deceptively misdescriptive. A mark is misdescriptive if it falsely or incorrectly describes an ingredient, quality, use, intended use, function, or other characteristic of the goods or services in connection with which the mark is used. A misdescriptive mark is deceptive and should be refused registration if it is likely to deceive or mislead consumers as to the nature of the goods or services, or their origin or characteristics. If a term is unlikely to deceive or mislead, the mark may be fanciful rather than merely misdescriptive.

USE AND OTHER CONDITIONS ON MARKS

Use of a mark is typically established for purposes of trademark law when the mark is used on goods, on their containers, packaging, or labels, or on displays associated with the goods, and the goods are sold or transported in the course of domestic or international trade, that is, the goods are imported or exported. If it is not practical to place a mark on goods, it may be sufficient to use the mark on documents associated with the goods or with their sale. Obviously, it is not possible to attach a mark to a service, so for services, use is established by using or

displaying the mark in the sale or advertising of the services. Specific requirements may also exist under a country's domestic law. For example, the United States requires a *bona fide* use in the ordinary course of trade, while some countries may accept a token use of the mark as sufficient to acquire or preserve rights in a mark.

While use of a mark cannot be required as a condition of filing an application, some countries require use to obtain the actual registration or to maintain it in force. Where use is required to maintain the registration, TRIPS Article 19.1 provides that "the registration may be cancelled only after an uninterrupted period of at least three years of nonuse, unless valid reasons based on the existence of obstacles to such use are shown by the trademark owner. Circumstances arising independently of the will of the owner of the trademark which constitute an obstacle to the use of the trademark, such as import restrictions or other government requirements for goods or services protected by the trademark, shall be recognized as valid reasons for nonuse." TRIPS Article 19.2 provides that the use of a trademark by another person must be recognized as use of the mark for purposes of maintaining the registration, so long as the mark is subject to the control of its owner.

TRIPS Article 20 prohibits WTO Members from imposing certain special requirements on the owners of marks. Under that provision, "use of a trademark in the course of trade must not be unjustifiably encumbered by special requirements, such as use with another trademark, use in a special form, or use in a manner detrimental to its capability to distinguish the goods or services of one undertaking from those of other undertakings." These provisions "do not preclude a requirement prescribing the use of the trademark identifying the undertaking producing the goods or services along with, but without linking it to, the trademark distinguishing the specific goods or services in question of that undertaking."

RIGHTS OF THE TRADEMARK OWNER

The owner of a registered trademark has exclusive rights to use the mark on the goods specified in the registration, or in connection with the services specified in the registration. That is, in accordance with TRIPS Article 16, the owner is entitled to prevent all third parties from

- "using, in the course of trade,"
- without the owner's consent,
- a sign that is:

  - identical to the owner's mark or
  - similar to the owner's mark,
- "for goods or services that are":
  - identical or
  - similar
  - "to those in respect of which the owner's trademark is registered" and
- "where such use would result in a likelihood of confusion."[198]

Where the use involves "an identical sign for identical goods or services, a likelihood of confusion [must] be presumed."[199] Protection for well-known marks must apply "to goods or services which are not similar to those for which a trademark is registered, provided that the use the mark on or in connection with those goods or services indicates a connection between those goods or services and the owner of the registered trademark" and further "provided that the interests of the owner of the registered trademark are likely to be damaged by the use."[200]

When another party uses a mark in violation of the rights of the owner of the mark, the offense is called *infringement*. Infringement is a civil wrong and in some cases may also be a criminal offense.

Dilution is another type of trademark offense that occurs when one party adopts or uses another party's mark on noncompeting goods or in connection with noncompeting services, thereby decreasing the strength of the earlier mark. This may decrease the value of the earlier mark, as consumers may associate the mark with the later user. Dilution may also preclude the earlier user from using the mark in connection with its normal expansion into related areas of business. Use on noncompeting goods or services could cause confusion as to their source, particularly if the earlier mark is well known.

Example: Assume that Acquitaine is a highly distinctive, registered trademark for hotel and restaurant services. Two blocks from the Acquitaine Hotel, a dry

---

[198] TRIPS Article 16.2.

[199] *Id.*

[200] TRIPS Article 16.3.

cleaning and laundry establishment hangs a sign advertising itself as Acquitaine Dry Cleaners. The marks are highly similar. Since hotels often provide laundry and dry cleaning services, the services are related. Taking into account all of the facts, the later user of the Acquitaine mark appears to be infringing. If the services were held to be unrelated, the hotel would need to show that its mark had some degree of fame among the relevant public in order to demonstrate that its mark had been diluted.

SENIORITY AND SUPERIOR RIGHTS

Competing rights in a mark are determined on the basis of seniority. In general, the party with the earliest claim has rights that are superior to those of other claimants. Where there is a conflict, the rights of the junior party (that is, the party whose rights were acquired later in time) are subject to those of more senior users (that is, the party whose rights were acquired earlier in time). This principle applies regardless of whether the rights were acquired by use or by registration, and it applies equally in examining applications for registration, determining oppositions, or evaluating a claim of infringement. This approach is consistent with TRIPS Article 16.1, which provides that "[t]he rights of the trademark owner shall not prejudice any existing prior rights, nor shall they affect the possibility of Members making rights available on the basis of use."

In evaluating conflicting claims, one should look to evidence of superior rights. Superior rights are established by evidence of the earliest date on which a party can establish rights, for example the date of application for registration, the priority date if applicable, or in countries where rights are acquired by use, the date the mark was first used in a manner sufficient to establish trademark rights (a matter for domestic legislation). For well-known marks, the relevant date would be the date on which the mark became well known under the applicable law.[201]

[201] *See* TRIPS Article 16.2, which provides in part that "[i]n determining whether a trademark is well-known, Members shall take account of the knowledge of the trademark in the relevant sector of the public, including knowledge in the Member concerned which has been obtained as a result of the promotion of the trademark."

WELL-KNOWN MARKS

Article 6*bis* of the Paris Convention requires that Paris Convention countries refuse or cancel the registration of any trademark, and prohibit the use of a mark, "that constitutes a reproduction, imitation, or a translation, liable to create confusion" with a mark that is "considered … to be well-known in that country" and "used for identical or similar goods." TRIPS requires WTO Members to apply Article 6*bis*, *mutatis mutandis*, to services[202] and extends its provisions to "goods or services that are not similar to those in respect of which a trademark is registered, provided that use of that trademark in relation to those goods or services would indicate a connection between those goods or services and the owner of the registered trademark and provided that the interests of the owner of the registered trademark are likely to be damaged by such use."[203] Under Paris Article 6*bis*(2), the proprietor of a well-known mark must have at least five years from the date of registration to request cancellation. Paris Article 6*bis*(3) specifies that "[n]o time limit can be fixed for requesting cancellation" of a mark registered in bad faith, or for prohibiting the use of a mark that is used in bad faith.

There is no definitive list of well-known marks, so Paris countries and WTO Members must carry out these obligations by making determinations on a case-by-case basis. The determination must be made for each mark on the basis of evidence that tends to establish that the mark is, or is not, well known.

The issue of whether a mark is well known may arise in a number of situations: in the course of trademark examination; in a claim for trademark infringement by another mark or by a trade name or internet domain name; in an opposition or cancellation proceeding; or in evaluating whether to exclude goods from entry into the country. The issue may be raised by government employees in carrying out their duties (for example, by trademark examiners or customs officials, or by the proprietor of the well-known mark). In any event, the party asserting a mark to be well known has both the responsibility for producing appropriate evidence and the burden of persuading a finder of fact that the mark is a well-known mark.

---

[202] TRIPS Article 16.2.

[203] TRIPS Article 16.3.

EVALUATING WHETHER A MARK IS WELL KNOWN

To be entitled to protection as a well-known mark, a designation must function as a mark and must be well known by at least one sector of the public. A designation functions as a mark if it serves to distinguish the goods or services of one undertaking from those of other undertakings—the same standard applied to marks submitted for registration. Other requirements for registrability, such as whether a designation is visually perceptible, are not relevant for purposes of determining whether a designation constitutes a mark, because the protection to which a well-known mark is entitled does not depend on its registration or even on its registrability. However, a designation that is generic for the goods or services associated with the mark, or that is dictated by technical or functional considerations, cannot perform the function of a trademark and therefore will not meet the requirement of being a "mark" within the meaning of the law.

In determining whether a trademark is well known, WTO Members must "take account of the knowledge of the trademark in the relevant sector of the public, including knowledge in the Member concerned that has been obtained as a result of the promotion of the trademark." It is irrelevant to the issue of protection *how* knowledge of the mark is created, for example, through use of the mark in the domestic market or elsewhere, provided that the owner can establish that the mark is known in the domestic market by the relevant sector of the public. WIPO published a *Joint Recommendation Concerning Provisions on the Protection of Well-Known Marks* (hereafter "WIPO Joint Recommendation") that is available from WIPO. Article 2 of the *Joint Recommendation* includes the following factors that should be considered in determining whether a mark is well known:

1. Degree of knowledge or recognition of the mark in the relevant sector of the public;
2. Duration, extent and geographical area of any use of the mark;
3. Duration, extent and geographical area of any promotion of the mark, including advertising or publicity and the presentation, at fairs or exhibitions, of the goods and/or services to which the mark applies;
4. Duration and geographical area of any registrations or applications for registration of the mark, to the extent that they reflect the mark's use or recognition;

5. Record of successful enforcement of rights in the mark, in particular, the extent to which the mark was recognized as well known by competent authorities; and
6. Value associated with the mark.

It is appropriate to consider only factors that are relevant in a particular case, and to consider any other factors that may be relevant.

RELEVANT SECTOR OF THE PUBLIC

An important criterion for determining whether a mark is well known is identifying the relevant sector of the public that would be expected to have knowledge of the mark. It is not required in all cases that a mark be well known by the general public. Some types of goods and services are not expected to be used or known by the general public but may be well known among individuals who purchase, sell, or otherwise deal with those goods or services, and the adoption of a mark or trade name that is the same as or similar to one of these marks can create confusion in the marketplace. Therefore, it is critical to identify the sector of the public for which knowledge of the mark is relevant.

The WIPO Joint Recommendation (Article 2(2)(a) states that:

Relevant sectors of the public shall include, but shall not necessarily be limited to:

(i) actual and/or potential consumers of the type of goods and/or services to which the mark applies;

(ii) persons involved in channels of distribution of the type of goods and/or services to which the mark applies;

(iii) business circles dealing with the type of goods and/or services to which the mark applies.

Applying this guidance, for consumer products, the relevant sector of the public would be individuals who customarily purchase items of the type represented by the mark. For industrial, scientific, medical, or technical products, the relevant sector of the public means the individuals who would customarily purchase or use items of the same type as those represented by the mark, either on their own behalf or on behalf of an employer.

Examples: For a mobile phone, the relevant sector of the public would be persons who purchase mobile phones. For hospital equipment, the relevant

sector of the public would include the hospital purchasing agent and employees who use the particular item of equipment.

TYPES OF EVIDENCE THAT CAN BE CONSIDERED

Determining whether a mark is, or is not, well known is a factual determination accomplished by evaluating the available evidence, whether from public sources or submitted by a private party. Acceptable evidence may include the following:

- **Survey evidence**. To establish that a mark is well-known, survey evidence should demonstrate that the mark is recognized as indicating the source of goods or services by a substantial segment of the relevant sector of the market. Survey evidence can also be used to refute a claim that a mark is well known if it shows that relatively few members of the relevant group of consumers recognize that the mark identifies the source of the goods or services. To be acceptable evidence, a survey should meet statistical standards of reliability and validity, criteria that reflect the extent to which a survey gives consistent and meaningful results. Among other factors, a survey's sample population must be of an appropriate size to give statistically significant results, the sample must be drawn from the relevant sector of the public, and data must be collected in a way that provides sound, consistent, and relevant evidence of the facts for which the survey is offered in evidence.
- **Evidence of significant sales**. Documented evidence of a significant number of sales in the relevant market would be adequate evidence that a mark is well known. To establish that a mark is well known, the number of sales should be evaluated in view of the number of potential purchasers for the goods or services. While it can be inferred that all purchasers know about the mark, it is not the case that all persons who know about the mark are purchasers. In particular, many people may be aware of expensive or luxury goods even where they have not purchased the goods.
- **Evidence of advertising to establish fame of the mark**. Documented evidence of substantial advertising, that is, advertising that reaches a significant portion of the relevant consuming public, would be adequate evidence that a mark is well known. Evidence might include the number of times an advertisement is shown, or preferably, the estimated number of viewers of a commercial advertisement. It is not necessary that the advertisement be published in or broadcast from the country where the mark is alleged to be well known. It is sufficient that the advertising

reaches persons in the relevant consuming public in that country. In addition, the number of viewers of a commercial advertisement should be evaluated in view of the number of potential consumers in the relevant sector of the market.

- **Internet or electronic evidence**. Documented evidence of a large number of "hits" on a website that advertises the item associated with the mark may be relevant evidence that a mark is well known. Each "hit" can be presumed to indicate that an individual has knowledge of the mark. The number of "hits" should be evaluated in view of the number of potential purchasers of the goods or services.
- **Evidence that a mark has been considered well known abroad**. Evidence that a mark has been determined to be a well-known or famous mark in one or more foreign countries is acceptable evidence that the mark is well known internationally. Such evidence would not necessarily establish that the mark is known in a particular country, although this may be provided by legislation. In the Andean Community, evidence that a mark has been considered well known in one Andean country establishes the mark as well known in all Andean countries.[204]
- **Evidence of foreign registrations**. It is expensive to protect a mark in countries around the world and unlikely that a business will undertake this expense except where its goods or services are marketed widely. It is reasonable to infer from evidence of multiple foreign registrations that a mark has achieved some degree of fame in the countries where it is registered. This type of evidence may be considered, among other factors, to establish that a mark is well known internationally, although it does not necessarily indicate that the mark is known in the relevant sector of a particular country.

PERSONAL KNOWLEDGE

An individual's personal knowledge of the mark, or lack of personal knowledge of the mark, is not acceptable evidence and should not be taken into account in evaluating whether a mark is well known. The use of personal knowledge as evidence has a number of shortcomings:

[204] Decision 486, Article 224.

- A government employee may not be a member of the relevant sector of the market, in which case the employee's knowledge or lack of knowledge of the mark is irrelevant.
- Even where the employee is a member of the relevant sector of the market, the individual may not be representative of the relevant sector, that is, the employee may have greater or less knowledge of the particular goods or services than the typical member of the sector.
- At best, a single individual does not constitute an appropriate sample.

The use of personal knowledge lacks transparency and basic fairness to the parties, since the personal knowledge of an examiner, customs official, judge, or other official, cannot be evaluated or refuted by either party.

GOOD FAITH AND BAD FAITH

The concepts of good faith and bad faith relate to the intention or motivation of a party in adopting or attempting to register a mark. A party is said to have acted in good faith when its actions were undertaken without deceptive intent, and without knowledge of information from which the party knew or should have known that its actions would be deceptive, dishonest, or infringing. Even a party who act in good faith may infringe the rights of another party. However, it may be appropriate to impose more stringent penalties, or to award greater damages, when infringement occurs as the result of bad faith.

Issues of good faith and bad faith can be inferred from the circumstances. The issue often arises with respect to well-known marks where another party has registered a mark that conflicts with the well-known mark, or has used a mark that would infringe the well-known mark. In this situation, an evaluation of the good faith or bad faith of an alleged infringer should take into consideration whether the person had knowledge of the well-known mark at the time he or she applied to register the conflicting mark or undertook the infringing activity. Although the issue of good faith or bad faith frequently arises in regard to well-known marks, it may also arise in the context of infringement of a registered mark.

Prior knowledge of the more senior mark is strong evidence of bad faith but is not dispositive of the issue of bad faith, since an alleged infringer could have actual knowledge but could reasonably believe that the adoption and use of its mark would not create a likelihood of confusion with the senior mark. To make this argument, the junior user should point to differences between the marks, between the goods or services to which they apply, to the circumstances of their use, or to

other factors used in evaluating likelihood of confusion, and argue that those factors could reasonably be believed to be sufficient to avoid a likelihood of confusion. This argument should be evaluated on the basis its reasonableness, taking into account the extent of actual differences.

Another factor that could be offered as evidence of bad faith is the degree of similarity in the trade dress used in connection with a mark that infringes a well-known mark. The use of the same or a similar mark, in connection with the same, similar, or related goods and services, together with similar trade dress, strongly suggests an intention to trade on the good will of the original and mislead or confuse the public and therefore bad faith. Likewise, the use of identical images, designs, or words on a label suggests an intention to mislead or confuse and therefore bad faith.

On the other hand, the use of factual statements of the contents, quality, or quantity of goods, descriptive materials such as pictures of the contents of a package, or information that is required for health or safety purposes or that is legally mandated, such as disclosures regarding pharmaceutical products or instructions regarding the use of agricultural chemicals, may be used by all producers of a particular type of product. Functional elements of trade dress, such as the use of a pop-top opener on a can or a handle on a box, should not be taken into account in determining whether there is bad faith since functional elements can be used by any producer unless they are protected by a patent or utility model.

RIGHTS OF OWNER OF WELL-KNOWN MARK

The owner of exclusive rights in a well-known mark must be entitled to prohibit use of a mark of the type described in the section “Rights of the trademark owner,” if the registrant or user of such mark does not have the owner's authorization. In addition, the owner of a well-known mark must be entitled to the same remedies regarding a mark that is identical or similar to the well-known mark for goods or services that are not similar to the goods or services the well-known mark identifies, provided that the interests of the owner of the well-known mark are likely to be damaged by such use.

INFRINGEMENT

Infringement occurs when a party uses a mark in the course of trade in violation of the exclusive rights of another party. This conduct harms industry and the public as well as the owner of the mark, even when infringement is unintentional.

Unintentional infringement can occur when one party adopts a mark without being aware that it is identical or similar to a mark owned by another party and uses the mark for the same, similar, or related goods and services. The harm can be particularly serious in cases of intentional infringement where the infringer attempts to imitate the mark and its packaging as nearly as possible in order to mislead consumers.

One result of infringement is to deceive consumers, who purchase infringing goods or services they believe originate from the owner of the mark. At best, infringement deceives the consumer, who receives goods or services that are not what the consumer intended to purchase. More often, the goods or services identified by an infringing mark are of inferior quality and lower value than those offered by the owner of the mark. Goods bearing an infringing mark may be defective, have a very short useful life, contain harmful material, be unsuitable for use, fail to perform in the way expected, or prove less valuable in other ways. Even if the goods or services are of comparable quality, the consumer may find it difficult to obtain repair or maintenance services to the same extent guaranteed by the legitimate owner of the mark.

Infringement also harms the owner of the mark, who not only loses a sale but also suffers damage to his or her business reputation. A consumer who experiences problems with infringing goods may wrongly associate those problems with the trademark owner. Consumers often do not recognize that they have purchased infringing goods until they attempt to obtain relief for faulty merchandise from the manufacturer—and even then may be convinced that the manufacturer is simply refusing to honor a warranty or guarantee. Consumers who have had a bad experience with infringing goods may take extra care to obtain legitimate goods, or they may simply avoid purchasing goods bearing the infringed mark. Moreover, publicity about inferior or harmful counterfeits may cause consumers to avoid purchasing legitimate goods for fear of obtaining the infringing goods.

Industry also suffers from trademark infringement because of the lack of consumer confidence in trademarks. Consumers who have been once deceived will be more cautious in making future purchases, to the detriment of all honest merchants and suppliers.

A special case of trademark infringement is *trademark counterfeiting*, where goods or packaging bear, without authorization, a mark that is identical to another party's mark or cannot be distinguished from it in its essential aspects. Often, counterfeit goods also copy the trade dress of a legitimate product, making it difficult for the

consumer to distinguish between the authentic and the counterfeit product.[205] This is a particularly serious problem since the consumer justifiably relies on the reputation for quality associated with the mark and instead receives items that are substandard and in some cases harmful or even deadly.

EVALUATING INFRINGEMENT

To prove infringement, the owner must produce evidence to establish each and every element of infringement, as shown below. To defeat a civil claim or criminal charge of trademark infringement, the defendant need only show that one or more elements of infringement has not been established.

In a civil case, these elements would normally be established by the owner of the protected mark, and the elements should be proved by a preponderance of the evidence. In a criminal proceeding, the prosecutor would normally establish such facts, possibly together with evidence of intent, if intent is a legal requirement, and the standard of proof would normally be higher than in a civil case. Evidence would also be offered to support the owner's superior rights in the mark. In most cases, a pivotal issue will be whether the use creates a likelihood of confusion. However, if the infringement involves “the use of an identical sign for identical goods or services, a likelihood of confusion shall be presumed." TRIPS Article 16.1)

CONDUCTING THE EVALUATION

The first issue to be determined is the similarity of marks, in terms of their appearance, sound, and meaning, as discussed below. Without such similarity, no infringement can be said to occur. However, there may be no infringement even for identical marks as a result of considering other factors such as those described below. In other situations, it may be appropriate to find infringement when one mark is similar but not identical to the other, where the goods or services identified by the marks are identical, similar, related, or frequently used and/or marketed

[205] TRIPS Article 51, fn. 14(a): “‘counterfeit trademark goods’ shall mean any goods, including packaging, bearing without authorization a trademark which is identical to the trademark validly registered in respect of such goods, or which cannot be distinguished in its essential aspects from such a trademark, and which thereby infringes the rights of the owner of the trademark in question under the law of the country of importation.”

together. For identical marks and identical goods or services, infringement must be presumed.

In all other cases, a determination of infringement involves weighing the evidence in light of factors mentioned below. Not all factors will be pertinent in each case, but where a factor is relevant, it should be considered in reaching the decision on likelihood of confusion. The greater the similarity between marks, the less similarity is needed between the goods and services of the two parties, and vice versa. Thus, it may be appropriate to find infringement where the goods or services are similar or related to each other or frequently used and/or marketed together, using the factors described in the section, Likelihood of Confusion Factors, to determine whether the marks are sufficiently similar to support an infringement finding.

EVIDENCE OF INFRINGEMENT

Establishing infringement involves both a factual and a legal determination. Ownership of a mark, whether or not it is registered, sales or other use by another party, the way the marks are used in the market, and the facts to establish whether a mark is well known are all factual issues on which evidence may be provided, while the standard for establishing infringement is a legal issue. In some cases, it may be useful to offer survey evidence to establish a likelihood of confusion by showing, for example, whether members of the relevant purchasing group distinguish between the marks, how they encounter the marks in the market, or whether they perceive the marks as identifying the same source of goods or services.

LIKELIHOOD OF CONFUSION

A critical function of the trademark system is to prevent confusion as to the source of goods. This issue arises in determining whether or not to approve an application to register a mark, whether to cancel a registration, and whether one mark infringes another.

To establish likelihood of confusion in an infringement case or cancellation proceeding, it is not sufficient to show that confusion may possibly occur. Rather, it must be clearly established that the allegedly infringing mark claimed is likely to cause confusion or mistake, or to deceive consumers, as to the source of goods or services, or their association with or sponsorship by a particular source. That is, the confusion must be probable. To meet this standard, the party asserting a likelihood of confusion must offer evidence and present arguments that confusion

is more likely than not. A number of factors have been identified to assist in analyzing such evidence and arguments. These factors are discussed below.

ELEMENTS OF TRADEMARK INFRINGEMENT

Infringement exists if all of the following are true:

- A mark is protected by registration or as a well-known mark.
- Another party is using a mark that is:
  - The same as, or similar to, the protected mark, or
  - A reproduction, imitation, or translation of a well-known mark, or the essential part of the mark constitutes a reproduction or imitation of a well-known mark.
- The mark is being used on or in connection with goods or services that are
  - The same as, or similar to the goods or services associated with the protected mark, or
  - Not similar, but use of the mark in relation to those goods or services would indicate a connection between those goods or services and the owner of the registered trademark and the interests of the owner of the registered trademark are likely to be damaged by such use.
- The use is without the authorization of the owner of the protected mark.
- The use creates a likelihood of confusion with the protected mark. (Paris Convention Article 6bis and TRIPS Article 16.3)

If the marks are identical and are used in connection with identical goods or services there is no need to prove likelihood of confusion, which must be presumed. (TRIPS Article 16.1.)

ACTUAL CONFUSION

A showing of actual confusion is not necessary to establish infringement, and a showing that there has been no actual confusion is not sufficient to show that infringement has not occurred. The standard is likelihood of confusion, not actual confusion. If evidence of actual confusion is offered, it should be evaluated relative to the number of opportunities for confusion. This is important since actual

confusion may also result from carelessness, inattention, or indifference. If similar marks have been used concurrently over a period of years with few or no instances of actual confusion, it may be inferred that there is little likelihood of confusion, while many instances of actual confusion relative to the number of opportunities may suggest that a likelihood of confusion exists. It is reasonable to accord little weight to evidence of actual confusion unless the evidence is clear and convincing.

EVALUATING LIKELIHOOD OF CONFUSION

Likelihood of confusion should be evaluated with regard to customers and potential customers for goods or services associated with the marks. It is unnecessary to show that all or a majority of the members of the group would be confused. Ordinarily, it is sufficient to show that an appreciable number of reasonable purchasers are likely to be confused, relative to the number of potential purchasers.

Moreover, the evaluation should be conducted from the point of view of a reasonable purchaser in the context in which ordinary purchasers would encounter the marks in the marketplace. Purchasers may not recall a mark in its exact form and rarely encounter competing marks side by side. Thus, it is generally not appropriate to make an evaluation of likelihood of confusion on the basis of a side-by-side comparison since this approach will give weight to minor differences that may be overlooked in the way the marks are actually encountered in the marketplace.

It is not appropriate to make a determination of likelihood of confusion based solely on a personal evaluation by a judge (or panel of judges), examiner, or other official, as these individuals may not be representative of potential consumers. In any event, such an approach lacks transparency and basic fairness since an applicant or party to an infringement case cannot evaluate the basis on which the determination was made or challenge its foundation or sufficiency. The likelihood of confusion between two marks, or between a mark and trade name or domain name, should be based on evidence of the likelihood of confusion.

LIKELIHOOD-OF-CONFUSION FACTORS

Determining likelihood of confusion involves both questions of fact and law. In an effort to remove some of the subjectivity from these determinations and ensure uniform treatment, various jurisdictions have developed criteria for evaluating likelihood of confusion. OHIM, for example, has published *Guidelines for Examination in the Office for Harmonization in the Internal Market (Trade Marks*

and Designs) on Community Trade Marks. These *Guidelines* (Part C, Section 2, section 3.4.1). state that:

> The Court has identified the following factors for determining whether goods/services are similar:
>
> - their nature
> - their intended purpose
> - their method of use
> - whether they are complementary or not
> - whether they are in competition or interchangeable
> - their distribution channels/points of sale
> - their relevant public
> - their usual origin.

Similarly, several U.S. court decisions have identified factors to be considered in evaluating likelihood of infringement. These factors are known variously as the *Dupont* factors (based on In *In re E. I. du Pont de Nemours & Co*., 476 F.2d 1357, 177 USPQ 563 (C.C.P.A. 1973), *Sleekcraft* factors (based on *AMF Inc. v. Sleekcraft Boats*, 599 F.2d 341 (9th Cir. 1979), *Lapp* factors (based on *Interpace Corp. v. Lapp, Inc*., 721 F.2d 460 (3d Cir. 1983), dealing with likelihood of confusion between non-competing goods), or by other names depending on the case in which they were described. In U.S. law, all of these factors should be considered, with more weight accorded to those that are more relevant to the circumstances of the case, and other factors may also be considered if they are relevant.

In determining the likelihood of confusion between two marks, or between a mark and a trade name or domain name, it is appropriate to consider evidence concerning such factors as the following:

- **Similarity or dissimilarity of the marks**. The similarity of marks should be determined by comparing the marks in their entireties, based on their appearance, sound, and commercial impression. Criteria for determining the similarity or dissimilarity of marks are discussed below. To establish a likelihood of confusion, it is not necessary that the marks be identical. However, if the marks are not at least somewhat similar, there is little

likelihood of confusion. If the marks are similar, also consider other factors.

- **Similarity or dissimilarity of the goods or services or whether they are related**. The goods associated with the marks should be compared. It is not necessary that the goods be identical in order to establish a likelihood of confusion. Confusion is unlikely when marks are used on or in connection with goods or services that are dissimilar and unrelated, although similar marks used in connection with dissimilar goods or services may result in dilution of the mark. For goods or services that are not the same, it is appropriate to consider whether they are sufficiently related so that the relevant class of consumers or potential consumers would likely believe that the goods and services originate from a common source, even where the goods or services are not identical or the persons who use the marks are not in competition with each other.

  In evaluating the similarity or dissimilarity of goods and services, it is appropriate to consider evidence as to whether the goods or services of one party:

  — Directly compete with those of the other party;

  — Are commonly or frequently used and/or marketed together with those of the other party; or

  — Likely create the reasonable impression in the mind of the relevant class of customers or potential customers that there is some connection those who offer the goods or services under the marks, or are so different that the relevant consumers or potential consumers would not reasonably believe they originate from the same source.

  For medicines or potentially harmful products, it may be appropriate to find a likelihood of confusion with less similarity than would be required to establish a likelihood of confusion for goods or services that do not pose a potential threat to public health or safety.

- **Channels of trade**. Goods or services are more likely to be confused if they are offered in the same or similar channels of trade, although this is not an essential consideration. Confusion is more likely when consumers encounter the goods or services through the same types of retail outlets or methods of distribution. On the other hand, some overlap in marketing

approaches or markets may not be significant where the intended purchasers from one party do not customarily buy the type of goods offered by the other party.

- **Degree of care and conditions under which purchases are made**. In general rule, the likelihood of confusion can be evaluated from the point of view of the extent of thinking, observation, and attentiveness a reasonably careful purchaser exercises in connection with buying goods or services. This degree of care depends upon the particular goods or services being purchased. Casual or impulse purchases of inexpensive items usually do not involve a high degree of care on the part of the consumer. This situation increases the likelihood of confusion and requires greater differences to prevent confusion by consumers. By contrast, purchasers of costly goods or services, or those that require special knowledge or skills to use, generally involve a higher degree of care. This decreases the likelihood of confusion, and only minor differences may be sufficient for these consumers to distinguish between the marks.

- **Fame of the earlier mark**. The greater the fame of the earlier mark, the greater the likelihood that a similar mark will be perceived as having the same origin. It is appropriate to consider evidence of how long the mark has been used; the duration, amount, and geographic extent of advertising and promotion of goods or services associated with the mark; the degree of recognition of the mark in the marketplace; revenues from sales associated with the mark; the nature and extent of use of the same or similar marks by third persons; and the distinctiveness of the mark. When a mark is similar to a famous mark, there is greater likelihood that consumers will be deceived or confused. Consequently, a famous mark is entitled to receive greater protection than a mark that is not widely recognized.

- **Strength or weakness of mark**. The stronger a mark, the greater the likelihood that consumers will assume that goods or services with a similar mark are associated with the earlier mark, while a mark that is weak is unlikely to command the same consumer identification. Because similar marks are more likely to be confused with a strong mark, a strong mark is entitled to greater protection. In evaluating the strength or weakness of a mark, it is appropriate to consider the number and nature of similar marks

for the same or similar goods or services, as these are one indication of the strength or weakness of a mark.

A mark that has descriptive aspects, is laudatory, or is a commonly used word may be weak and, therefore, entitled to only a very narrow scope of protection. This usually means protection against use of the exact mark for the identical goods or services. Where evidence shows that many unrelated persons use the same or substantially similar mark for goods or services the same or closely related to those of the person claiming infringement, it is reasonable to conclude that the mark is weak and that the marks and that there is a likelihood of confusion only where the parties' goods or services are identical. If there is no evidence of a relatively large number of similar marks for the same or similar goods or services, or if the mark claimed to be infringed is not strong, it is reasonable to find a likelihood of confusion where the goods or services of the parties are related even though the parties' marks are not identical.

- **Actual confusion**. It is appropriate to consider, as one factor among others, the nature and extent of any actual confusion relative to the number of opportunities for confusion, taking into account the circumstances under which confusion occurred, the nature of the evidence of actual confusion, and the possibility that actual confusion can result from misdirected inquiries, thoughtlessness, or the occasional mistake. See Actual confusion above. If evidence is not strong, it is appropriate to accord little weight to this factor.

- **Concurrent use without actual confusion**. It is appropriate to consider evidence that marks have been used concurrently without actual confusion, as this may be evidence that there is no likelihood of confusion. If evidence is offered of concurrent use without mistake, it is appropriate to consider the length of time and conditions under which the marks have been used without evidence of actual confusion, relative to the number of opportunities for confusion, taking into account such facts as whether the goods or services are sold or distributed in the same channels of trade to the same intended customers, the prices of the goods or services, the similarities or dissimilarities of the classes of relevant customers or potential customers, how (under what circumstances) consumers encounter the goods or services in the marketplace, any efforts by the senior claimant to monitor the marketplace for infringing marks, whether

the parties have a previous relationship with each other, and whether and how the parties advertise or promote their respective goods or services.

- **Intent of the later user**. The later user's intent is not a factor required to establish that consumers are likely to be confused, nor is evidence of the later user's good faith in using a mark. However, the intent of the junior user is a relevant factor to consider. When there is evidence that the later user had a predatory intent—that is, intended to cause confusion as to the origin of the goods or services—this factor strongly weighs in favor of finding a likelihood of confusion, and the later user should have the burden of proving the absence of a likelihood of confusion. It is appropriate to consider direct evidence of the later user's intent, if available, or to consider circumstantial evidence that can be inferred from the later user's actions. This kind of evidence can include proof that the later user knew about the earlier user's mark at the time the later user selected the mark, acknowledged an intent to use a mark like or which brings to mind the earlier user's mark, and advertises and promotes its goods or services in a way that strongly shows an intent to lead members of the relevant class of customers or potential customers to believe the goods or services originate from the same source as the earlier user's goods or services.

EVALUATING THE SIMILARITY OF MARKS

The similarity of two marks is evaluated by considering the marks in their entireties and the commercial impression they each create, based on a comparison of the appearance, sound, meaning, and connotation of the marks.

- **Consider the entire mark**. When marks consist of combinations of words, or words and pictures, or of other elements, it is important to consider each mark in its entirety, and the overall commercial impression each creates. It is inappropriate to determine likelihood of confusion solely on the basis of the individual elements of the marks. It is appropriate to give greater weight to a prominent feature that makes a substantial impression and that a typical purchaser would be more likely to remember. It is appropriate to give less weight to descriptive or generic elements, and to weak elements that are widely used in marks for similar goods or services. Disclaimed elements should not necessarily be discounted in determining whether there is a likelihood of confusion.

- **Appearance**. A mark should be evaluated by taking into account its appearance as a whole. It is appropriate to treat pictures as equivalent to words and vice versa. Letters of the alphabet and abbreviations can be treated the same as the words they are understood to mean. For marks that consist solely of alphabet letters, appearance may be the controlling issue since these marks are difficult to pronounce and usually do not have an ascertainable meaning.

- **Sound**. Confusion can occur when marks are phonetically similar, particularly where goods or services ordered orally, for example, by telephone or by directing another person to make a purchase. If there are different possible pronunciations, the marks should be evaluated using the usual pronunciation by the public. Marks that are phonetically equivalent, including misspelled words, should be treated as the same. However, when marks sound alike but suggest different things, it may be appropriate to determine that there is no likelihood of confusion.

- **Meaning.** Sometimes marks communicate the same idea, stimulate the same mental reaction, or make the same impression in the market, even though different words and images are used. Such marks may be treated as the same or substantially similar where the meaning of a mark outweighs its visual or phonetic difference from a protected mark and is therefore likely to cause confusion. When a mark contains foreign words, it is appropriate to consider the translation and meaning of the words as understood by an appreciable segment of relevant purchasers. A foreign word can be often treated as equivalent to word in the language of a country. If more than one translation is possible, the more common translation should be considered. If both marks include foreign words, or if the meaning of the words is not likely to be understood, it may be appropriate to consider the marks "as is" without translating them.

SIMILARITY OF MARKS BASED ON MEANING

Compare Better Homes and Gardens®

with Better Yards and Lawns

Example: The BimBim® mark at right is the same in two languages. Would the elements be perceived as the same or different?

The answer depends in part on whether consumers would recognize the signs as being the same.

SOME DIFFERENCES ARE INSUFFICIENT TO DISTINGUISH BETWEEN MARKS

- The use of a different type font or size: *Bon vs.* Bon *vs.* Bon *vs.* BON
- Minor changes in spelling, grammar, or punctuation: Old *vs.* Olde; Quick-Start *vs.* Kwikstart, Bon *vs.* Bonne, Beau *vs.* Beaux.
- Translation or transliteration into a foreign language if the foreign term is likely to be recognized: Meister *vs.* Master *vs.* Maître; Swiss *vs.* Suisse.

- **Minor Differences.** For some types of goods or services, relatively small differences may be sufficient to enable purchasers to distinguish between the same or similar goods. However, even where purchasers exercise significant care in their purchases, some marks contain differences that are so minor that, in an analysis for likelihood of confusion, the marks should be treated as identical.

  Presenting an element of a mark in a different size or color does not change the essential nature of the mark, nor does the use of a different type font for marks that consist of words, letters, or symbols. Sales may be made on the basis of an oral description or order, and consumers may reasonably assume that a mark that is the same except for its color or type font originates from the same producer. This is consistent with ordinary experience, where some producers offer different lines of goods under the same mark but with marks in different colors.

  Minor changes in spelling should also be ignored—the use of a singular for plural, or vice versa, or misspellings that are phonetic or intended to produce a particular effect, such as an antiquated spelling or spelling used in a different dialect of the language. Where a foreign word can be understood, translation or transliteration of a mark, or of an element of a

mark, into a foreign language does not distinguish one mark from another. Often, reversing the elements of a mark may be insufficient to distinguish between marks, particularly where the change in order is consistent with translation into a different language.

OTHER TYPES OF MARKS

A trademark or service mark is used exclusively by the owner, or with the owner's consent and under the owner's control. There are two other types of marks, both used by persons other than the owner.

A *collective mark* is used by members of a collective organization to show membership in the organization or to show that goods or services are produced or furnished by members of the organization. The collective organization is the owner of the collective mark and must ensure that only qualified persons (that is, members of the organization) use the mark. The mark would be used by many persons on goods or in connection with services they provide. A *collective trademark* or *collective service mark* indicates commercial origin of goods or services in the members of an organization, that is, that the goods were produced by, or services provided by, a member of the organization. A *collective membership mark* indicates membership in an organization. One of the most common types of collective membership marks is a membership pin worn by members of an organization.

TYPES OF CERTIFICATION MARKS

- Marks that certify that goods or services originate in a specific geographic region
- Marks that certify that the goods or services meet certain standards in relation to quality, materials, or mode of manufacture
- Marks that certify that the performer of the services or manufacturer of the goods has met certain standards or belongs to a certain organization or union

—From *Trademark Manual of Examining Procedure* Section 1306.01

Another type of mark used by others is the *certification mark*. A certification mark shows that the owner of the mark certifies that the goods or services meet certain standards. The standards can relate to the quality or characteristics of the goods or services, qualifications of persons who produce the goods or provide the services, or the geographic origin of the goods or services. The owner of a certification mark should not be permitted to use the mark on or in connection with the owner’s

own goods or services, that is, on goods produced or sold by the owner or in connection with services provided by the owner.

The use of a geographic term as a certification mark raises special issues. It is good policy to preserve the freedom of all persons in the region to use the term and to prevent "abuses or illegal uses of the mark that are detrimental to all those entitled to use" it. (U.S. Patent and Trademark Office *Trademark Manual of Examining Procedure* (TMEP) section 1306.02(b)) Generally, use of the mark is controlled through the government of a region, either directly or through a body to which it has given authority. It is appropriate for the applicant for a geographical certification mark to be a government (for example, of a country, state or city); a department of a government; or "a body operating with governmental authorization that is not formally a part of the government." (*TMEP* section 1306.02(c))

DISTINGUISHING AMONG VARIOUS TYPES OF MARKS

Both trademarks and service marks indicate commercial origin of the goods or services that are the subject of the mark. A collective mark indicates membership in an organization or that goods or services are produced by members of an organization. The owner of a trademark or service mark has the exclusive right to use or authorize the use of the mark for the same or similar goods and services. Collective marks and certification marks are used by more than one person.

Only a collective mark shows that the users of the mark are related to each other through being members of a collective group. Only the certification mark certifies certain qualities or characteristics of the goods or services. Unlike a trademark or service mark, a certification mark *is not used* by its owner, *does not indicate* commercial source, and *does not distinguish* the origin of the goods or services of one person from those of another person.

LICENSING AND ASSIGNMENT OF MARKS

Under TRIPS Article 21, WTO Members "may determine conditions on the licensing and assignment of trademarks." However, compulsory licensing of trademarks is prohibited, and "the owner of a registered trademark shall have the right to assign the trademark with or without the transfer of the business to which the trademark belongs."

If the owner of a mark licenses its use to another party, the owner must continue to exercise control over the standards of the goods or services subject to that license.

This allows a consumer to predict whether the goods or services identified by the mark will satisfy the consumer's expectations and preferences for particular types of products or services.

12 GEOGRAPHICAL INDICATIONS

Geographical indications "identify a good as originating in the territory of a Member, or a region or locality in that territory, where a given quality, reputation or other characteristic of the good is essentially attributable to its geographical origin."[206] The term *geographical indication*, which originates in the TRIPS Agreement, is often used interchangeably with *appellation of origin*, a term used in the Paris Convention.

PROTECTION OF GEOGRAPHICAL INDICATIONS

WTO Members are obligated under TRIPS Article 22.2 to provide the legal means for interested parties to prevent:

(a) the use of any means in the designation or presentation of a good that indicates or suggests that the good in question originates in a geographical area other than the true place of origin in a manner which misleads the public as to the geographical origin of the good;

(b) any use which constitutes an act of unfair competition within the meaning of Article 10*bis* of the Paris Convention (1967).

WTO Members are also required to "refuse or invalidate the registration of a trademark" that "contains or consists of a geographical indication with respect to goods not originating in the territory indicated, if use of the indication in the trademark for such goods in that Member is of such a nature as to mislead the public as to the true place of origin."[207]

These same provisions likewise apply to a geographical indication that, "although literally true as to the territory, region or locality in which the goods originate, falsely represents to the public that the goods originate in another territory."[208]

---

[206] TRIPS Article 22.1.

[207] TRIPS Article 22.3.

[208] TRIPS Article 22.4.

In implementing TRIPS protection for geographical indications, a WTO Member is not permitted to "diminish the protection of geographical indications that existed in that Member immediately prior to the date of entry into force of the WTO Agreement."[209]

DIFFERENT APPROACHES TO PROTECTION

Geographical indications are protected according to a number of different legal frameworks. Some countries have established *sui generis* protection for geographical indications, often in conjunction with a system of registration.[210] Other countries protect geographical indications through some other system of protection, such as trademarks, collective marks, or certification marks.[211] In some countries, protection is available under the laws against unfair competition. Finally, some countries offer some combination of these forms of protection.[212] As examples,

- "Australia meets its TRIPs obligations to protect wine and spirit GIs [geographical indications] through specific legislation, and other GIs through a range of unfair competition and consumer protection legislation, as well as the common law. Key legislation is:

  — the Trade Practices Act 1974 which prevents misleading conduct, including representations concerning the place of origin of goods;

  — the Trade Marks Act 1995 which allows for the registration of a GI term, provided that certain criteria are met; and

[209] TRIPS Article 22.3.

[210] For example, the Czech Republic, European Union, India, Switzerland, Trinidad and Tobago, and Tunisia.

[211] A number of countries apply some aspect of the trademark system. These include, *inter alia*, Australia (trademark), Austria (certification mark), Belize (certification mark), Canada (trademark), Grenada (collective mark), United Kingdom (certification and collective marks), and the United States (certification mark).

[212] There are multiple routes of protection available for geographical indications in, *inter alia*, Australia, Canada, New Zealand, Trinidad and Tobago, the United Kingdom, and the United States.

— the Australian Wine and Brandy Corporation Act 1980 which sets up a specific register of protected names for wine."[213]

- Trinidad and Tobago provides for registration of geographical indications but provides that protection is available regardless of whether an indication has been registered.

- The United States protects geographical indications as certification marks indicating geographic origin, or in some cases as trademarks or collective marks.[214] In addition, geographical indications may be protected in some cases under unfair competition law.[215]

In most countries, rights in geographical indications are implemented by the industrial property offices, with enforcement through the courts if necessary.

SPECIAL PROVISIONS FOR WINES AND SPIRITS

The TRIPS Agreement specifies additional protection for geographical indications for wines and spirits. Under these special provisions, it is not permissible to use a geographic indication for wines or spirits, even where the true origin of the goods is indicated or the geographic indication is used in translation or accompanied by expressions such as "kind," "type," "imitation," or the like.[216]

TRIPS also requires WTO Members to refuse or invalidate the registration of a trademark for "wines which contains or consists of a geographical indication identifying wines," and to refuse or invalidate the registration of a trademark "for spirits which contains or consists of a geographical indication identifying spirits," with respect to wines or spirits not having the origin indicated by the use of the

---

[213] Advisory Council on Intellectual Property, Recommendation 12, http://www.acip.gov.au/reviews/goverment-enforcement-trademark/, accessed October 27, 2013.

[214] *See*, "Geographical Indication Protection in the United States," http://www.uspto.gov/web/offices/dcom/olia/globalip/pdf/gi_system.pdf, accessed March 28, 2009.

[215] *See, e.g., Institut National Des Appellations v. Brown-Forman Corp*, 47 USPQ2d 1875, 1884(TTAB 1998), in which the U.S. Patent and Trademark Office's Trademark Trial and Appeal Board held "COGNAC" to be protected as a common law (unregistered) certification mark in the United States.

[216] TRIPS Article 23.1.

geographical origin in the mark. This should be accomplished *ex officio* if a WTO Member's legislation so permits or at the request of an interested party.[217]

Protection is also required for homonymous geographical indications for wines.[218]

EXCEPTIONS TO PROTECTION

The TRIPS Agreement provides for a number of exceptions to the protection of geographical indications. In particular, WTO Members are not required to prevent "continued and similar use of a particular geographical indication of another Member identifying wines or spirits in connection with goods or services by any of its nationals or domiciliaries who have used that geographical indication in a continuous manner with regard to the same or related goods or services in the territory" of that Member either at least since 15 April 1984 or in good faith preceding 15 April 1994.[219]

Measures adopted to implement provisions on geographical indications are not to "prejudice eligibility for or the validity of the registration of a trademark, or the right to use a trademark, on the basis that such a trademark is identical with, or similar to, a geographical indication," either

- Where "a trademark has been applied for or registered in good faith," or
- Where "rights to a trademark have been acquired through use in good faith either:"
  - Before TRIPS became applicable in that WTO Member, or
  - Before the geographical indication was protected in its country of origin.[220]

WTO Members may require that requests involving the use or registration of a trademark be presented within five years. This period is measured from the earlier of

[217] TRIPS Article 23.2.

[218] TRIPS Article 23.3.

[219] TRIPS Article 24.4.

[220] TRIPS Article 24.5.

- The date "the adverse use of a protected indication has become generally known in that Member," or
- The date the trademark was registered in that Member, "provided that the trademark has been published by that date, if such date is earlier than the date on which the adverse use became generally known in that Member,"

and provided that the geographical indication is not used or registered in bad faith.[221]

In some cases, an indication that meets requirements for protection in one country is ineligible for protection in another country. TRIPS addresses this by providing that WTO Members are not required to implement TRIPS provisions for the protection of geographical indications with respect to goods or services for which the relevant indication is identical with the term customary in common language as the common name for such goods or services in the territory of that Member.[222] Likewise, Members are not required to apply provisions on geographical indications "in respect of a geographical indication of any other Member with respect to products of the vine for which the relevant indication is identical with the customary name of a grape variety existing in the territory of that Member as of the date of entry into force of the WTO Agreement."[223]

These provisions also do not apply where the term is the common term in the language of the country for the item, or where a person uses in the course of trade his own name or that of a predecessor in business, providing that such use is not in such a manner as to mislead the public,[224] or where geographic indications have fallen into disuse or cease to be protected in that country.[225]

GEOGRAPHICAL INDICATIONS AND APPELLATIONS OF ORIGIN

Appellations of origin and geographical indications refer to virtually identical concepts that arise out of different legal frameworks but have slightly different

---

[221] TRIPS Article 24.7.

[222] TRIPS Article 24.6.

[223] *Id.*

[224] TRIPS Article 24.8.

[225] TRIPS Article 24.9

requirements for protection. Differences are summarized in Table 7. These issues are principally of interest with regard to countries that are members both of the WTO and of the Lisbon Agreement for the Protection of Appellations of Origin and their International Registration.[226] The Lisbon Agreement defines an appellation of origin as "the geographical name of a country, region, or locality, which serves to designate a product originating therein, the quality and characteristics of which are due exclusively or essentially to the geographical environment, including natural and human factors."[227]

Table 7. Geographical Indications and Appellations of Origin Compared

Geographical indication	Appellation of origin
Does not require that the indication be a geographical name of a country, region, or locality	Requires that the indication be a geographical name of a country, region, or locality
Specifically includes reputation	Does not mention reputation
Relevant factors must be essentially attributable to good's "geographic origin"	Relevant factors must be due exclusively or essentially to product's "geographical environment"
Does not specify whether relevant factors may be attributable to "natural and human factors"	Specifies that geographical environment includes "natural and human factors"
Protection against use in the designation or presentation that indicates or suggests that the good in question originates in a geographical area other than the true place of origin in a manner which misleads the public as to the geographical origin of the good Any use which constitutes an act of unfair competition within the meaning of Article 10*bis* of the Paris Convention	Protection against any usurpation or imitation
Protection even where the true origin of the goods is indicated or the geographical indication is used in translation or accompanied by expressions such as "kind", "type", "style", "imitation" or the like, only for wines or spirits.	Protection even if the true origin of the product is indicated or if the appellation is used in translated form or accompanied by terms such as "kind," "type," "make," "imitation," or the like.

[226] The Lisbon Agreement provides for the protection of appellations of origin through an international registration system. The appellations are registered with WIPO, which publishes them and notifies other Lisbon contracting states of the registration. Each of the other contracting states has up to one year in which to declare that it cannot ensure the protection of the appellation within its territory.

[227] Lisbon Agreement Article 2(1).

In some respects, the TRIPS Agreement gives broader protection since a geographical indication may be any indication that identifies a good as originating in a particular territory, region, or locality. Thus, under TRIPS, a geographical indication is not restricted to the geographical name of a country, region, or locality. This distinction could be important where an indication has geographical significance but is not the geographical name of a country, region, or locality.

This issue could arise, for example, where protection was sought for an indication that consisted of a graphical image of a country or a well-known landmark in a country, a nickname for a region or locality or its inhabitants, or other term that identifies a good as originating in a particular territory, region or locality.

Another issue arises with historical country names that would clearly meet the requirements of TRIPS, but it is not clear whether such names would qualify as the geographical name of a country under the Lisbon approach.

Protection under TRIPS is also broader with regard to the standard for linking geographical origin to goods. Under Lisbon, a product must have "quality or characteristics" that are due exclusively or essentially to the geographical environment. Under TRIPS, this standard is expanded to permit protection where a reputation is essentially attributable to the geographic origin of goods. In essence, the Lisbon standard appears to require some demonstrable difference between products from one geographic region or locality and similar products from other localities, while under TRIPS, it is sufficient to show that goods have a reputation based on their geographical origin.

On the other hand, the Lisbon approach clearly recognizes that differences may arise in a number of ways, including by natural and human factors. These might include, for example, not only different characteristics attributable to climate and soil but also characteristics based on the traditional manufacture of products in a particular country, region, or locality.

The two systems also provide for different conditions of use. Under the TRIPS Agreement, comparative advertising is permissible, even when it makes reference to geographical indications, provided the use of those indications is not deceptive. Thus, under TRIPS, it would be permissible to advertise that a product, other than wines or spirits, was similar to, or shared characteristics with, a product identified by its geographical indication, provided the true country of origin was specified and the effect was not to mislead the public as to the true place of origin. Under

the Lisbon approach, this would not be permissible, even where the geographical indication was accompanied by a phrase such as “kind,” “type,” “make,” “imitation,” or the like.[228]

[228] Lisbon Agreement Article 3.

13 TRADE NAMES AND TRADE DRESS

TRADE NAMES

A *trade name* is the name or designation that identifies a legal entity or a natural person. A company's trade name may or may not be the same as its legal name, (that is, the name under which it is organized as a legal entity, such as its corporate name, or the name of a partnership or other owner of the business). An enterprise may be doing business under its trade name, even where the real party in interest is a separate legal entity such as an individual or another company. A trade name may be the subject of a commercial registration; however, Paris Convention Article 8 requires that trade name protection be provided without the requirement of registration.

A trade name should also be distinguished from a trademark or service mark. A trade name may in some cases function as a trademark or service mark but will not do so in all cases. Both a trade name and a trademark or service mark will be used in connection with a business, but the trade name identifies the business entity, while the trademark is used on goods or in connection with services.

> **Example 1**: Ahmed opens a fruit stand that he operates for a few hours a day. He obtains a business registration under his own name but hangs a sign on his stand that reads, *Snack Place*. Ahmed is doing business as *Snack Place*, which is therefore his trade name. Because *Snack Place* is entirely descriptive, it cannot function as a trademark.

> **Example 2**: *Subway* is the trade name of a restaurant chain, that is, the name under which the restaurant does business. Because it distinguishes the services of one restaurant from the services of others, Subway® is also a registered mark for restaurant services. Subway® markets a sandwich it calls the BMT®, which is a registered mark for the food product. The Subway restaurant chain is owned by Doctor's Associates, Inc. *Doctor's Associates, Inc.*, is the company's corporate name, that is, the name under which the corporation is legally organized as a legal entity separate from the identity of its owners, and under which it conducts legal business. Consequently, Doctor's Associates, Inc., is the owner of the Subway® and BMT® trademarks.

A trade name can infringe a trademark, and a trademark can infringe a trade name. A trade name can also misappropriate a geographical indication. WTO Members must provide a means for interested parties to prevent the use of "any means in the designation or presentation of a good that indicates or suggests that the good in question originates in a geographical area other than the true place of origin in a manner which misleads the public as to the geographical origin of the good." This language is sufficiently broad to encompass a trade name that is misleading as to the origin of the goods.

> **Example 3**: A company sells cotton that is grown in the Sudan and processed and made into clothing in a large Asian country. The company does business as Joe's Egyptian Cotton Clothing Company.

TRADE DRESS

Trade dress is packaging that contributes to a product's overall commercial impression in the market. Trade dress includes the form of the package in which goods are offered and any designs or lettering (including marks) contained on the packaging. Consistent and easily recognizable trade dress aids consumers in locating a particular product. When trade dress is distinctive of the products of a particular manufacturer or merchant, it may be protected as a trademark. Thus, a trademark is a form of trade dress that serves to distinguish the goods or services of one undertaking from those of another. In Egypt, trade dress is most often protected by industrial design registration.

Although trade dress is usually defined in terms of the packaging of goods, many service providers also invest in the development of distinctive presentations of their services. For example, a business that provides restaurant services may adopt a distinctive color scheme, architectural style, and decor for its restaurant. These features contribute to the business's overall impression in the market. If these features are distinctive, so that potential patrons can immediately identify the restaurant on sight, it may be possible to obtain trademark protection for those features.

Trade dress infringement is an act of unfair competition. Consumers are harmed when they are misled as to the source or nature of goods by imitative packaging. Even sophisticated consumers may be misled by imitative trade dress, but consumers who cannot read, or who cannot read the language of the label, are particularly vulnerable to deception.

An important limitation on rights in trade dress is that the element in which rights are claimed cannot be essentially dictated by function. For example, a specially designed crate for strawberries may be distinctive of a particular producer because only that producer offers strawberries in that style crate. However, if that design confers some practical benefit, such as being sturdier, lighter in weight, or extending shelf life, the owner cannot use a trade dress claim to prohibit others from adopting those functional elements. If the design itself is essentially functional, the owner can claim exclusive rights only by obtaining a patent or petty patent. If the features of the design are essentially decorative, the owner may be able to claim exclusive rights under a registered industrial design.

Notwithstanding the need to protect against misleading imitations, public policy favors a high level of flexibility in the selection of trade dress. In particular, suppliers are free to include descriptive elements in their trade dress, and to convey that a product has certain characteristics. Thus, it is not uncommon to find several brands of identical or similar products bearing similar trade dress—for example, canned peas with labels bearing a picture of peas, or floral-scented air freshener labels bearing images of flowers.

Trade dress that merely consists of common elements, such as standard package shapes, product images, or color combinations, is entitled to a lower level of protection than trade dress that incorporates unusual forms of packaging or color schemes. However, even trade dress that incorporates common elements is entitled to some protection. In general, the more slavish an imitation, the likelier it was intended to deceive or mislead, a factor that should be considered in determining whether trade dress has been infringed.

Trade dress may include elements that are themselves subject to some other form of protection, most commonly images subject to copyright, marks, or industrial designs. These elements do not lose their character as protected items of intellectual property merely because they are included in product packaging. Thus, in the examples above, two manufacturers might each choose to package peas in cans of a standard shape, and to use a trademark and picture of peas on the label. However, each manufacturer would need to create its own trademark and its own picture of peas. This is required because copying the picture from the label of the other manufacturer would likely give rise to a claim of copyright infringement, and copying the mark of the other party would constitute trademark infringement, even where no claim could be upheld for infringement of trade dress.

Trade dress infringement is a separate offense from trademark infringement. If one company markets goods in packages that are identical to the distinctive packaging of another company except that the packages bear a different mark, there would be no claim for trademark infringement, even though the consumer would be deceived. However, because of the deceptive nature of the act, it should be possible to claim trade dress infringement.

DISTINGUISHING AMONG THE TYPES OF PROTECTION

Trademarks, service marks, and other types of marks identify the origin of goods or services, or convey information about their qualities. Geographical indications identify the geographic region from which goods originate, or convey information about their qualities based on that origin. Trade names identify the business entity that provides goods or services. A commercial registration identifies the responsible legal entity. In some cases, these different forms of intellectual property may overlap.

Example 4: The Sri Lanka Tea Board regulates the tea industry, maintains quality standards for Ceylon tea, and markets and promotes Ceylon tea in Sri Lanka and abroad.[229] The Tea Board applies a lion logo to Sri Lankan tea that meets the Board's standards. The lion logo is protected as a certification mark, where that protection is available, or in other countries as a collective mark or trademark. Tea producers market their products under their own brands, with or without the lion logo that serves as a quality brand. Packaging often includes the term *Ceylon*, for example, "100% Pure Ceylon." *Ceylon* is a geographical indication for tea produced in Sri Lanka (formerly Ceylon). It is not necessary that the geographical indication be presented in a particular way.

Example 5: The *Federación Nacional de Cafeteros de Colombia* (National Federation of Coffee Grower of Colombia) is a nonprofit association that establishes and maintains standards for Colombian coffee and carries out and promotes consumer recognition of the quality of Colombian coffee. The Federation owns a number of registered trademarks, including a series of Juan

[229] Sri Lanka Tea Board, http://www.pureceylontea.com/, accessed October 30, 2013.

Valdez® logos. Because the *Federación* sells coffee, its marks are protected as trademarks rather than certification marks. The geographical indication *Colombian* is protected in the United States as a certification mark, with the Colombian® registration owned by the Republic of Colombia, and under other forms of protection elsewhere. The Colombian® mark certifies that coffee was grown in the Republic of Colombia and that it has been subjected to standard inspection authorized by the Colombian Government and approved for export.

Even though some countries use trademarks or certification marks to protect geographical indications, there are some differences. In general, a geographical indication requires no certification, has no owner, and is not subject to the control of another party. Many people can produce items from a particular region, so the right to use a geographical indication is not an exclusive right. On the other hand, if more than one person uses the same mark for the same goods, the mark will not fulfill its function of identifying the source of the goods or services (e.g., the manufacturer of goods, the party providing certification services), so the right to control use of a mark must be exclusive to one owner. In most countries, trademark rights will belong to the first person to register the mark, except 1) where another registrant has prior rights based on a foreign registration or 2) where the mark is a well-known mark entitled to be protected even without registration. Protection of a trade name should follow similar rules in order to avoid causing confusion over the source of goods or services.

The same principles used to evaluate whether one mark infringes another should be applied in cases involving infringement of a mark by a trade name or infringement of a trade name by a mark. This determination will largely depend on whether use of the particular mark or trade name will tend to cause confusion in the market. In making this determination, it is appropriate to consider such factors as the similarity of the mark and trade name; whether the mark and trade name are used in connection with the same, similar, or related goods or services, whether the goods or services are sold in the same channels of commerce, and the circumstances of the sales or likely sales, including the sophistication of the buyers.

Ordinarily, minor differences—in spelling, pronunciation, or punctuation, for example—should not be considered sufficient to distinguish between a mark and a trade name. In evaluating likelihood of confusion, the trademark office, commercial registration authority, and the courts should principally look to the overall commercial impression and not merely at precise details of the mark and

trade name. In Example 6 below, it would be to the detriment of the public and of the proprietor of the mark Sprite® (a mark registered to the Coca-Cola Company) to permit another company to adopt the trade name *Sprite* and market non-alcoholic beverages under its trade name, even if the company used a different trademark on its beverage containers.

IDENTIFYING THE RIGHT FORM OF PROTECTION

In some cases, a business may claim more than one form of protection for its packaging. Some lines of cosmetics, notably those of the Avon Corporation, feature decorative and distinctive bottles and jars, which are often collectibles. In these cases, the containers may be protected both by an industrial design and through trade dress. Protection of trade dress may overlap with protection for trademarks, and a company may own a variety of forms of industrial property. Sometimes, only one form of protection is called for, while in other cases, a single item may have the benefit of several forms of protection.

> **Example 6**: The Coca-Cola Bottling Company is the trade name and legal entity that packages a variety of beverage products, one sold under the trademark Coca-Cola® and Coke®, another sold under the trademark Sprite. The company also claims trademark rights in the distinctive Coca-Cola bottle and in the slogan, "Coke—it's the real thing®." The Coca-Cola® beverage is not the subject of a patent, but its formula is protected as a trade secret.

> **Example 7**: General Motors Corporation produces several lines of vehicles, including Cadillac®, Buick®, and Chevrolet ®; these serve both as trade names, to identify the seller, and as trademarks, to identify the goods. The various models also have names that serve as marks, such as Camaro® or Escalade®. General Motors®, also known by its initials GM®, is a trademark for the vehicles, the trade name under which the company does business, and the legal corporate name that would be the subject of a commercial registration. The engineering design of the vehicle often includes a number of patented inventions, such as a fuel injection system, or a type of suspension, or shock-absorbing body design. Elements of the design are also often decorative, and these features—such as the shape of an automobile body or the arrangement of instruments on its control panel—may be the subject of industrial design protection.

In advising clients, the goal of attorneys should be to help clients select the best form or forms of protection and use them in ways that contribute to the value of their businesses.

14 REPRESSION OF UNFAIR COMPETITION

Unfair competition concepts arise in connection with a number of different areas of intellectual property and are especially important in relation to the use of trademarks and the labeling of goods.

UNFAIR COMPETITION

Unfair competition is "any act of competition contrary to honest commercial practices in industrial or commercial matters."[230] Laws prohibiting unfair competition protect intangible property such as business goodwill, trade dress, trade secrets, and know-how. Acts of unfair competition include but are not limited to breach of contract, misappropriation of trade secrets, and false or misleading representations as to the origin or quality of goods or services. Laws against unfair competition are sometimes included in commercial (companies) law and sometimes in consumer protection law.

The Paris Convention requires its members to provide in their national laws for the repression of unfair competition. These requirements are incorporated into the TRIPS Agreement, making them obligatory for WTO Members as well. At a minimum, Paris Convention countries and WTO Members must prohibit[231]:

> (i) all acts of such a nature as to create confusion by any means whatever with the establishment, the goods, or the industrial or commercial activities of a competitor;
>
> (ii) false allegations in the course of trade of such a nature as to discredit the establishment, the goods, or the industrial or commercial activities, of a competitor; and
>
> (iii) indications or allegations the use of which in the course of trade is liable to mislead the public as to the nature, the manufacturing process, the characteristics, the suitability for their

[230] Paris Convention Article 10*bis*(2)**.**

[231] Paris Convention Article 10*bis*(3)**.**

purpose, or the quantity, of the goods.

Restrictive business practices (monopolies) related to licensing may also be considered to be acts of unfair competition.

UNFAIR COMPETITION AND THE MISLABELING OF GOODS

Paris countries and WTO Members are obligated to provide for effective legal remedies to repress, or prevent, certain other unlawful acts:[232]

- Goods "unlawfully bearing a trademark or trade name" must be "seized on importation" into Paris countries
  - "where the mark or name is entitled to legal protection"[233] or
  - "where the unlawful affixation occurred" or
  - "in the country into which the goods were imported."[234]
- Goods that directly or indirectly use
  - "a false indication of the source of the good" or
  - "the identity of the producer, manufacturer, or merchant"

must be seized on importation into Paris countries or in the countries where the unlawful act occurred or in the country into which the goods were imported.[235]

- If seizure on importation is not permitted under a country's domestic law, the country must instead prohibit the importation or seize the goods inside the country.[236]
- If "neither seizure on importation, nor prohibition of importation, nor seizure inside the country" is permitted, "until such time as the legislation is modified" to permit these actions, Paris countries must provide such

[232] Paris Convention Article 9.

[233] Paris Convention Article 9(1).

[234] Paris Convention Article 9(2).

[235] Paris Convention Article 10.

[236] Paris Convention Article 9(5); this provision is also made applicable to goods bearing false indications of origin by Paris Convention Article 10(1).

> actions and remedies as are available to nationals under the country's domestic law.[237]

Seizure of goods unlawfully bearing a trademark or trade name must "take place at the request of the public prosecutor, or any other competent authority, or interested party, whether a natural person or a legal entity, in conformity with the domestic" law of the country.[238]

Moreover, "[a]ny producer, manufacturer, or merchant … engaged in the production or manufacture of or trade in such goods … [is] deemed to be an interested party," if the producer, manufacturer, or merchant is established either in the "locality falsely indicated as the source, region where such locality is situated, or country falsely indicated, or country where the false indication of source is used."[239]

To give effect to these requirements, Article 10*ter* requires Paris countries to provide "appropriate legal remedies to repress" the acts mentioned, and these remedies must be available to nationals of other Paris countries. Moreover, Paris countries must provide measures to permit enforcement actions by "federations and associations representing interested industrialists, producers, or merchants." These federations and associations must have the ability to take legal action before the courts or before administrative authorities to prevent the acts mentioned above.[240]

These provisions are made applicable under the TRIPS Agreement to all WTO Members and are strengthened with regard to importation of infringing goods.

---

[237] Paris Convention Article 9(6); this provision is also made applicable to goods bearing false indications of origin by Paris Convention Article 10(1).

[238] Paris Convention Article 9(3).

[239] Paris Convention Article 10(2).

[240] These requirements do not apply in the odd situation where the existence of such federations and associations is contrary to the laws of the country. The requirement to let associations take legal action also applies only in so far as the law of the country in which protection is claimed allows such action by federations and associations of that country.

ADDITIONAL REMEDIES AGAINST IMPORTATION OF INFRINGING GOODS

In addition to Paris Convention provisions incorporated in the TRIPS Agreement,[241] TRIPS provides for a number of specific remedies, including procedures to prevent the importation of infringing goods. These procedures, referred to as *border measures*, move enforcement to an early stage in the distribution process. Border measures offer two major advantages:

- **Reducing the number of legal proceedings**. By lodging a single application, an interested party—an intellectual property owner or person with a legal interest in the intellectual property, or an enforcement agency—can take action against an entire shipment of goods. Customs officials can temporarily suspend the release of the goods while the interested party brings a single legal proceeding to determine the legality of the goods, and the court can issue a single judicial decision on the merits of the case—i.e. determining whether or not the goods actually are infringing, and a single order on the disposition of the goods. Without such measures, enforcement becomes more complicated, costly, and time-consuming, as infringing goods may enter the market and require multiple enforcement actions to prevent their unlawful sale.

- **More equitably allocating losses due to infringement**. Initiating enforcement at an earlier stage reduces the chance that infringing goods will reach consumers or innocent purchasers. A border measures defendant—the owner, importer, or consignee—may have manufactured or ordered the goods. These persons are more likely than later purchasers to know that the goods are infringing and are better able to obtain evidence for use in the legal proceeding.

TRIPS border measures are mandatory for pirated copyright or counterfeit trademark goods but may also be made applicable to other types of intellectual property infringement. TRIPS border measures are discussed in the chapter on International Norms of Intellectual Property Protection.

---

[241] TRIPS Article 2.1.

MISLABELING OF GOODS AS TO NATIONAL ORIGIN OR PLACE OF MANUFACTURE

Paris Convention Article 10*bis* addresses the mislabeling of goods where the mislabeling is of such a nature as to create confusion as to "the establishment, the goods, or the industrial or commercial activities of a competitor," or where the mislabeling "is liable to mislead the public as to the nature, the manufacturing process, the characteristics, the suitability for their purpose, or the quantity, of the goods." However, the article does not directly[242] address the situation where goods are labeled as having originated in one country when in fact they originated in another.

TRIPS border-measures requirements of the TRIPS Agreement focus on the use of marks that are counterfeit or otherwise infringing, but TRIPS border measures do not mention false statements of origin. TRIPS Article 22 does address this issue—but only with respect to geographical indications.[243]

The issue of mislabeling goods as to their place of origin is therefore left to other sources of law. Often, requirements related to statements of origin are found in customs law. However, one of the oldest agreements on intellectual property addresses the issue directly. The Madrid Agreement (Indications of Source)[244] was adopted in 1891. This agreement provides for seizure upon importation of "all goods bearing a false or deceptive indication by which" a member country, or a

---

[242] It could be argued that mislabeling goods as to their place of origin is an act covered by Paris Convention Article 10*bis*(3)(3), that is., an act that is "liable to mislead the public as to the nature, … the characteristics, [or] the suitability for their purpose, … of the goods,"

[243] TRIPS Article 22 provides in part:

> 2. In respect of geographical indications, Members shall provide the legal means for interested parties to prevent:
>
> > (a) the use of any means in the designation or presentation of a good that indicates or suggests that the good in question originates in a geographical area other than the true place of origin in a manner which misleads the public as to the geographical origin of the good.

[244] This Madrid Agreement is to be distinguished from another Madrid Agreement relating to the international protection of marks.

place in a member country, "is directly or indirectly indicated as being the country or place of origin."[245]

The Madrid Agreement (Indications of Source), Article 1, also provides for seizure "in the country where the false or deceptive indication of source has been applied" as well as the country "into which the goods bearing the false or deceptive indication have been imported." "If the laws of the country do not permit seizure upon importation," the country may instead prohibit the importation of such goods or, if neither is permitted, make other remedies available until the country's laws can be modified to provide for the remedies provided under the Agreement. If a country's law does not specifically provide for sanctions for the use of false or deceptive indications of source, the same sanctions the country provides with regard to marks and trade names are to apply.

GOOD FAITH AND BAD FAITH

The concepts of good faith and bad faith relate to the intention or motivation of a party. These concepts arise frequently in evaluating whether a particular act constitutes an act of infringement or unfair competition. For example, the intent of a party in using a patented invention may be a factor to be considered in evaluating infringement.

A party is said to have acted in good faith when its actions were undertaken without deceptive intent, and without knowledge of information from which the party knew or should have known that its actions would be deceptive, dishonest, or infringing. Even a party who acts in good faith may infringe the rights of another party. However, it may be appropriate to impose more stringent penalties, or to award greater damages, when infringement occurs as the result of bad faith.

Issues of good faith and bad faith may be revealed if a person admits to facts that demonstrate bad faith, but these issues can also be inferred from circumstances. For example, a person may have a good faith expectation that copyright protection for a very old work has fallen into the public domain, but such a belief is probably not reasonable where the work is of more recent origin—and certainly not where it is last year's most popular song. In evaluating copying, a high degree of similarity

[245] Madrid Agreement for the Repression of False or Deceptive Indications of Source on Goods, Article 1.

may diminish the likelihood that the results were achieved independently, but where similarities lie in areas that are primarily dictated by function, similarities may be given less weight.

15 INTERNATIONAL NORMS OF INTELLECTUAL PROPERTY PROTECTION

Each country should have its own statutory system for granting rights to inventors, proprietors of marks, creators of industrial designs, and authors. Systems for securing rights to these forms of intellectual property are administered by offices located in different ministries. In general, each nation is free to determine its own intellectual property law and how that law will be implemented. However, most nations have joined together in treaties or other international agreements to set norms[246] or standards regarding the manner in which various types of intellectual property will be treated by the parties to those agreements. These agreements fall into three types:

- **Multilateral agreements** may address one or more forms of intellectual property. Substantive agreements may address the treatment that one party will accord to the nationals or property of other parties, substantive terms of protection, common treatment of certain procedural matters such as the calculation of dates. Agreements may also create a system that facilitates the process of obtaining protection in the member countries or classification systems to facilitate the administration of different forms of intellectual property.
- **Regional agreements** and **bilateral agreements** may do any of the above. However, regional agreements often harmonize practice within the region by creating a regional system by which to obtain industrial property protection throughout the region or in selected countries of the region.
- **Trade or other agreements with intellectual property provisions** often provide a common set of procedures and requirements for their members.

[246] The terms *norm* or *standard* are used here interchangeably to indicate provisions to which contracting parties of international agreements on intellectual property (or WTO Members) must conform. These are not standards in the sense that term is used in other contexts such as standards of the International Standards Organization (ISO). The term *norm* is sometimes used to avoid confusion, but *standard* is widely used, particularly with regard to the TRIPS Agreement.

Of these, the TRIPS Agreement is the foremost example, although there are numerous “free trade” or similar agreements with bilateral or regional scope.

Taken together, these agreements make up an international framework for the protection of intellectual property. Of the various multilateral agreements on intellectual property, more than twenty are intended to apply globally, that is, to be open to countries around the world. Some agreements have been in existence for many years, while others have been negotiated only recently. Some have broad membership—more than 100 members—while others have only a few members. A few agreements have been negotiated but never obtained the number of members required for the agreement to come into force. While such agreements are not legally binding even on the parties that signed or acceded to them, they may nevertheless have a practical effect. For example, the Washington Treaty on Intellectual Property in Respect of Integrated Circuits (referred to as the Washington Treaty or IPIC) never came into effect as an international agreement, but certain of its terms have been incorporated into the TRIPS Agreement and therefore are binding on all WTO Members.

The tables on the following page briefly summarize the international agreements that help to create a framework for the protection of intellectual property around the world. The table does not include regional or bilateral agreements. Whether to adhere to a treaty or other international agreement is a decision made by each nation. Once that decision is made, parties to the agreement are obligated to conform their national laws and practices to the provisions of the treaty or international agreement, and they are entitled to expect compliance by other members so that all parties may obtain the benefits of membership.

Treaties and other international agreements in the field of intellectual property cover a variety of areas, ranging from substantive intellectual property law to highly detailed procedures for granting or enforcing rights. Practitioners in the field of intellectual property should be familiar with the sources of international norms of intellectual property law and practice and with the treaties to which Egypt is a party.

The most basic norms or standards of intellectual property are found in the oldest conventions, the Paris Convention for the Protection of Industrial Property and the Berne Convention for the Protection of Literary and Artistic Works.

Table 8. Agreements with Global Application for Protection of Intellectual Property

Agreement	Subject
Paris Convention for the Protection of Industrial Property	Industrial property: patents and petty patents, trademarks, industrial designs, appellations of origin, repression of unfair competition
Patent Law Treaty	Harmonizes and simplifies administrative procedures for filing patent applications
Budapest Treaty on the International Recognition of the Deposit of Microorganisms for the Purposes of Patent Procedure	Facilitates international protection of inventions involving microorganisms through internationally recognized depositary authorities
Patent Cooperation Treaty	Facilitates international protection of inventions
Strasbourg Agreement Concerning the International Patent Classification	Classification system; facilitates patent searches
Madrid Agreement for the Repression of False or Deceptive Indications of Source on Goods	False or deceptive indications of source on goods being imported or offered for sale
Trademark Law Treaty	Simplifies and harmonizes administrative procedures for trademark registration
Singapore Treaty on the Law of Trademarks	Harmonizes administrative procedures for trademark registration
Nairobi Treaty on the Protection of the Olympic Symbol	Protects Olympic symbol against unauthorized commercial use
Madrid Agreement Concerning the International Registration of Marks	Facilitates international protection of marks
Protocol Relating to the Madrid Agreement Concerning the International Registration of Marks	Facilitates international protection of marks
International Convention for the Protection of New Varieties of Plants (UPOV)	Facilitates international protection for new varieties of plants
Nice Agreement Concerning the International Classification of Goods and Services for the Purposes of the Registration of Marks	Classification system; facilitates trademark searching by creating classifications of goods and services
Vienna Agreement Establishing an International Classification of the Figurative Elements of Marks	Classification system; facilitates searching for figurative elements of marks
Lisbon Agreement for the Protection of Appellations of Origin and their International Registration	Facilitates international protection of appellations of origin
Hague Agreement Concerning the International Registration of Industrial Designs	Facilitates international protection of industrial designs
Locarno Agreement Establishing an International Classification for Industrial Designs	Classification system; facilitates searching of industrial designs
Washington Treaty on Intellectual Property in Respect of Integrated Circuits	Layout-designs of integrated circuits
Agreement on Trade-Related Aspects of	Comprehensive requirements; applies to

Agreement	Subject
Intellectual Property Rights	Members of the World Trade Organization.

PARIS CONVENTION

The two most important benefits of the Paris Convention are the right of national treatment (Article 2) and the right of priority (Article 4).

NATIONAL TREATMENT

Article 2 creates an obligation for each country that is a member of the Convention ("countries of the Union" or more commonly, "Paris country") to accord "national treatment" to the nationals of all other countries of the Union. Article 2 provides that nationals of any Paris country "shall, as regards the protection of industry property, enjoy in all other" Paris countries "the advantages that their respective laws now grant, or may hereafter grant, to nationals." This is generally understood to mean that each Paris country must accord to nationals of other Paris countries treatment no less favorable than the treatment it accords to its own nationals, which is the standard adopted in the TRIPS Agreement. This right must be afforded without "a requirement of domicile or establishment in the country where protection is claimed." Article 3 extends the right of national treatment to nationals of countries that are not members of the Paris Convention where such persons are domiciliaries of, or "have a real and effective industrial or commercial establishment in, the territory of country of the Union." The Paris Convention contains other important provisions, and the following discussion is not exhaustive.

RIGHT OF PRIORITY

The right of priority permits applicants to claim the benefit of a filing date (called the *priority* date) in one Paris country with regard to applications filed in another Paris country within the applicable period. This permits the applicant to avoid the effects of actions that may have occurred subsequent to the priority date, in particular, acts that would have the effect of destroying the novelty of an invention and therefore its patentability. Without this right, virtually no patent applications could be filed in more than one country. "Any filing that is equivalent to a regular national filing under the domestic legislation" of a Paris country "or under bilateral or multilateral treaties between countries of the Union" is sufficient to give rise to the right of priority. (Article 4A(1)) The right of priority also applies to applications to register a trademark or industrial design. The right of priority has

the same advantage as to the ability to obtain protection for any industrial property where novelty is a factor in obtaining protection, such as petty patents and, in some countries, industrial designs. For marks, the right of priority gives the applicant the benefit of its priority date as though the priority date were the actual filing date in the country where priority is claimed. In most countries, where two identical or similar marks are submitted for registration, the right to registration belongs to the earlier applicant. In this situation, the right of priority may determine which party is entitled to the registration.

To take advantage of the right of priority, an applicant must "make a declaration indicating the date of the filing" on which the priority claim is based "and the country in which it was made." (Article 4D(1)) Countries may require the applicant to produce a copy of the application … certified as correct by the authority" in which it was filed and "a certificate from that same authority showing the date of filing, and a translation." (Article 4D(c)) However, no other formalities, such as legalization, can be required at the time of filing the application, although additional proof may be required later. If a Paris country requires the filing of a copy of the application on which priority is based, the applicant must be allowed at least three months to produce such application, without requiring a fee. The priority periods are 12 months for patents and utility models and six months for trademarks and industrial designs.

One important question is the prior art effect of an application that is first filed abroad and that claims priority based on that application as provided by Paris Convention Article 4. In Europe and Japan, the practice is to consider the application as prior art as of the priority filing date in the other country. The United States has a more complex set of rules for determining loss of novelty and for some purposes treats the application as prior art as of the application's earliest U.S. filing date.

INDEPENDENCE OF PATENTS IN DIFFERENT COUNTRIES

Article 4*bis* provides that "[p]atents applied for in the various [Paris countries] shall be independent of patents obtained for the same invention in other countries, whether [Paris countries] or not," and that patents obtained with the benefit of priority "shall … have a duration equal to that which they would have had if they had been applied for or granted without the benefit of priority." This means, among other things, that a country cannot fix a patent term that is calculated from the date of filing the earlier application.

The independence of patents in each country also means that a holding of invalidity in one country should not affect the validity of a patent in another country, although the same facts that justify cancellation of a patent in one country, such as the existence of prior art that would make the patent invalid, may be used to bring a cancellation proceeding in another country. Although neither the Paris Convention nor the TRIPS Agreement specifically addresses the conditions under which a country can hold that intellectual property rights are exhausted, this Article may, in effect, preclude conditioning exhaustion in one country on exhaustion in another.

RIGHT TO BE MENTIONED AS INVENTOR

Article 4*ter* provides that the "inventor shall have the right to be mentioned as such in the patent." Note that this provision applies even when the inventor is not the applicant as, for example, when a country's law provides for ownership of an invention by the inventor's employer.

LIMITATIONS ON REFUSAL OR INVALIDATION

Article 4*quater* prohibits countries from refusing to grant a patent or invalidating patents on the grounds that "the sale of the patented product," or product made by a patented process, "is subject to restrictions or limitations resulting from domestic law." TRIPS Article 27.1 permits WTO Members to exclude certain inventions from patentability if the Member must prevent the commercial exploitation of the invention to protect the *ordre public* or morality. However, a prohibition in the national law on exploitation of the invention is not sufficient to justify invoking the exception.

LIMITATIONS ON FORFEITURE AND COMPULSORY LICENSING

Article 5 limits the ability of Paris countries to provide for forfeiture, compulsory licensing, or cancellation of various forms of industrial property. Paris Article 5A reserves for the countries of the Union the right to issue compulsory licenses to prevent the abuse of patent rights. Failure to "work" (that is, failure to exploit) the claimed invention is cited as an example of abuse.

Paris Convention countries are not required to grant compulsory licenses to prevent abuse of patent rights, nor are they required to consider failure to work as an abuse of the patent right. However, if a Paris country does consider failure to work to be an abuse, Paris Article 5A prohibits the application for a compulsory license as a remedy until a minimum of three years after the date the patent is

granted and a minimum of three years after the date the patent application was filed, whichever is later. Article 5A also requires that a country granting a compulsory license for failure to work, or for insufficient working, must impose other safeguards, such as permitting the patent owner to justify the nonworking, and if the patent owner "justifies his actions by legitimate reasons," the compulsory license must be refused. The compulsory license must be nonexclusive and nontransferable, "even in the form of the grant of a sub-license, except with that part of the enterprise or goodwill which exploits such license." Moreover, Paris Article 5A reserves for the countries of the Union the right to provide for forfeiture of patent rights to remedy abuses, but only when the issuance of a compulsory license would be an insufficient remedy, and then not before two years after the first compulsory license was issued.

Provisions on compulsory licensing and forfeiture also apply to utility models. Article 5B prohibits forfeiture of industrial designs "under any circumstance," including for failure to work or for importation of articles corresponding to the protected industrial design. Article 5C prohibits countries of the Union from requiring the marking of the patent, utility model, or trademark registration, "or of the deposit of the industrial design, on the goods as a condition of recognition of the right to protection."

CAN WTO MEMBERS PROVIDE FORFEITURE FOR ABUSE?

TRIPS Article 2 requires WTO Members to comply with certain provisions of the Paris Convention, including Article 5A. That is, Members must fulfill the *obligations* of Paris Article 5A. However, TRIPS Article 2 does not preserve the rights reserved under Paris Convention Article 5A. Paris countries that acceded to the WTO agreed to limit their rights reserved under the Paris Convention. These countries also agreed

- To impose the safeguards of TRIPS Article 31 with respect to compulsory licenses issued pursuant to Paris Article 5A.
- That importation would satisfy any requirement to "work" the invention in a Member (TRIPS Article 27.1), and
- To limit further the circumstances when a Member could invoke forfeiture of a patent (TRIPS Articles 27.1 and 29).

Taking these provisions together, it can be argued that WTO Members cannot provide forfeiture for abuse.

GRACE PERIOD FOR PAYMENT OF MAINTENANCE FEES

Article 5*bis* specifies that a grace period of not less than six months must be allowed for the payment of fees required to maintain industrial property rights in effect. This payment can be made subject to a surcharge if provided by domestic legislation. In addition, Article 5*bis* provides that Paris countries "have the right to provide for the restoration of patents that have lapsed" for nonpayment of fees.

PATENTED DEVICES ON VESSELS, AIRCRAFT, AND VEHICLES

Article 5*ter* provides a limited exception to patent protection for patented devices used on board or forming part of vessels that temporarily or accidentally enter the territorial waters of a Paris country, "provided that such devices are used there exclusively for the needs of the vessel." Article 5*ter* also creates an exception for patented devices used "in construction or operation of aircraft or land vehicles when such aircraft or land vehicles" of other Paris countries when those vehicles "temporarily or accidentally enter the territory" of the country of the Union.

PRODUCTS OF A PATENTED PROCESS

Article 5*quater* addresses the importation of a product made by a patented product. This article provides that the rights of the owner of a patented process will be the same with regard to products made by that process for products imported into the country as the rights provided under domestic law for products manufactured in that country.

MANDATORY PROTECTION OF INDUSTRIAL DESIGNS

Article 5*quniquies* requires Paris countries to protect industrial designs.

TRADEMARK FILING AND REGISTRATION

Article 6 describes the conditions for the filing and registration of trademarks. In general, conditions for filing and registration are subject to the domestic legislation of each Paris country. "However, an application … filed by a national of [a Paris country] may not be refused, nor may a registration be invalidated, on the ground that filing, registration, or renewal, has not been effected in the country of origin." A mark registered in one Paris country must "be regarded as independent of marks in other [Paris countries], including the country of origin."

WELL-KNOWN MARKS

Article 6*bis* requires Paris countries "to refuse or cancel the registration, and to prohibit the use, of a trademark which constitutes a reproduction, an imitation, or a

translation" of a mark that is well known in the country of registration or use as already being the mark of another person and used for the same or similar goods. This prohibition applies where the reproduction, imitation, or translation of the mark would be liable to create confusion with the goods or services of the owner of the well-known mark. "A period of at least five years from the date of registration" must be "allowed for requesting cancellation of such a mark." However, "[n]o time limit can be fixed for requesting the cancellation or prohibition of the use of marks registered or used in bad faith." These provisions are strengthened by TRIPS Article 16.2.

ARMORIAL BEARINGS, FLAGS, AND STATE EMBLEMS

Article 6*ter* similarly prohibits the registration or use, as marks or parts of marks, of the "armorial bearings, flags, and other State emblems" of Paris countries, and of the "official signs or hallmarks" adopted by them to indicate control or warranty. The same provisions apply to the armorial bearings, flags, other emblems, or names of international intergovernmental organizations of which one of more Paris countries are members (other than those "that are the already subject of [other] international agreements … intended to ensure their protection"). An exception can be made where rights to a mark have been acquired in good faith before the Paris Convention entered into force in the country concerned. A Paris country that wishes to protect its State emblems, official signs and hallmarks indicating control and warranty should notify a list of such items to WIPO since some of the provisions of this article apply only where they have been communicated to WIPO.

ASSIGNMENT OF MARKS

Article 6*quater* sets conditions on the assignment of marks. These provisions are largely superseded by TRIPS Article 21, which provides the owner of a registered mark with the right to assign the mark with or without transferring the business to which the mark belongs.

FOREIGN REGISTRATION OF MARKS REGISTERED IN THEIR COUNTRY OF ORIGIN

Article 6*quinquies* provides certain benefits only for trademarks that are registered in their country of origin. Under this Article, "[e]very trademark duly registered in the country of origin shall be accepted for filing and protected as is in the other Berne countries except in certain situations." The expression "as is" (*telle quelle* in

the French version)[247] means in its original form. Such marks must be protected in the other Paris countries, except where they:

- Would infringe rights of third parties in the country where protection is claimed;
- Are not distinctive, "or consist exclusively of signs or indications that may serve in trade to indicate the kind, quality, quantity, intended purpose, value, place of origin, of the goods, or the time of production, or have become customary in the current language or *bona fide* and established practices of the trade of the country where protection is claimed"; or
- Are "contrary to morality or public order" and "are of such a nature as to deceive the public." However, a mark cannot be "considered contrary to public order for the sole reason that it does not conform to a provision of the legislation on marks, except if such provision itself relates to public order."

The country in which protection is requested may require the applicant to produce a certificate of registration in the country of origin, issued by the competent authority, but no authentication can be required for this certificate. The "country of origin" is any Paris country where the applicant has a real and effective industrial or commercial establishment or, if none, the Paris country where the applicant is domiciled, or if the applicant has no domicile in a Paris country but is a national of a Paris country, then the country of which the applicant is a national.

Paris Convention Article 6*quinquies* (c)(1) provides that, "In determining whether a mark is eligible for protection, all the factual circumstances must be taken into consideration, particularly the length of time the mark has been in use." A mark must not be refused registration in Paris countries solely because "it differs from the mark protected in the country of origin only in respect of elements that do not alter its distinctive character and do not affect its identity in the form in which it has been registered in the country of origin." This provision is particularly important to applicants whose marks are used in different languages in different countries.

---

[247] *See*, Bodenhausen, *Guide to the Application of the Paris Convention*, BIRPI (now WIPO) (Geneva 1968), at 111.

SERVICE MARKS

In Article 6*sexies*, Paris countries “undertake to protect service marks” but are not required to register them. That deficiency was remedied by TRIPS Article 15, which requires WTO Members to register service marks if they meet the other criteria for registration. Although Paris countries were not specifically required to provide the right of priority to service marks, TRIPS Article 62.3 applies the provisions of Paris Convention Article 4 *mutatis mutandis* to service marks, thus making the right of priority available for service marks as well as for trademarks.

REGISTRATION BY AGENT OR REPRESENTATIVE

Article 6*septies* addresses the situation where an agent or representative obtains registration in the agent’s or representative’s own name without permission of the proprietor of the mark. Where this occurs without the authorization of the proprietor of the mark, the proprietor “is entitled to oppose both the registration of the mark and the use of the mark” by the agent or representative.

MARK NOT TO BE REFUSED REGISTRATION BECAUSE OF NATURE OF GOODS

Article 7 provides that the “nature of the goods to which a trademark is to be applied” shall not “form an obstacle to the registration of the mark.” This provision does not prevent a country from prohibiting the goods themselves.

COLLECTIVE MARKS

Article 7*bis* obligates Paris countries to protect collective marks, including marks of associations “that are not established in or constituted according to the law of the country where protection is sought.”

TRADE NAMES

Article 8 obligates Paris countries to protect trade names “without the obligation of filing or registration, whether or not [the trade name] forms part of a trademark."

SEIZURE OF INFRINGING GOODS

Article 9 requires Paris countries to seize upon importation all goods “unlawfully bearing a trademark or trade name” that is entitled to legal protection in the country into which it is imported. The same requirement of seizure exists in the country where the mark was affixed. If the country’s domestic law does not provide for seizure, then the authorities must prohibit importation or seize the

goods inside the country or, if these actions are not permitted, must take such action as are permitted.

Article 10 makes the same provisions applicable "in cases of direct or indirect use of a false indication of the source of the goods or the identity of the producer, manufacturer, or merchant." Both Articles describe which parties are entitled to bring a complaint.

UNFAIR COMPETITION

Article 10*bis* obligates Paris countries to assure protection against unfair competition to nationals of Paris countries. Unfair competition is defined as "[a]ny act of competition contrary to honest practices in industrial or commercial matters." In particular, Paris countries are obligated to prohibit acts likely "to create confusion with the establishment, goods, or industrial or commercial activities of a competitor"; "false allegations in the course of trade of such a nature as to discredit the establishment, goods, or industrial or commercial activities of a competitor"; and indications or allegations that, when used in trade, are likely "to mislead the public as to the nature, the manufacturing process, the characteristics, the suitability for their purpose, or the quantity, of the goods." This Article lays a foundation for TRIPS Article 39.

Article 10*ter* obligates Paris countries to assure "appropriate legal remedies effectively to repress all the acts referred to in Articles 9, 10, and 10*bis*." To aid in repressing acts of unfair competition, Paris countries must "provide measures to permit federations and associations representing interested industrialists, producers, or merchants … to take action in the courts or before the administrative authorities … provided that the existence of such federations and associations is not contrary to the laws of their countries" and to the extent that this type of action is allowed under the law of the country in which protection is claimed.

TEMPORARY PROTECTION

Article 11 provides for temporary protection for patentable inventions, utility models, industrial designs, and trademarks, under certain limited circumstances, for "goods exhibited at official or officially recognized international exhibitions" held in a Paris country. The form of temporary protection is not specified but must not extend the period of priority.

INDUSTRIAL PROPERTY SERVICE

Article 12 requires each country "to establish a special industrial property service" for filing patents, utility models, industrial designs, and trademarks and a central office that will publish an official periodical that shows the names and "a brief designation of the inventions" in patents granted and "reproductions of registered trademarks."

DISPUTES

Article 28 provides that disputes regarding interpretation of the Paris Convention must be brought before the International Court of Justice if the dispute cannot be settled by negotiation.

The International Court of Justice (ICJ) hears disputes involving international law between countries that are members of the United Nations, and only where the countries agree to ICJ jurisdiction.[248] The ICJ can also give advisory opinions on legal questions referred to it by authorized U.N, organs and specialized agencies, such as WIPO. Note that provisions regarding disputes under the Paris Convention relate solely to disputes between countries and do not offer a mechanism for private parties to settle their disagreements with other parties or with other countries.

BERNE CONVENTION

The Berne Convention establishes a high level of copyright protection for works of authorship, which are defined broadly. Countries to which the Berne Convention applies (Berne countries) must provide a minimum term of copyright protection, usually the life of the author plus fifty years, to works first published in a Berne country or published or unpublished works of persons who are nationals or residents of a Berne country. Unlike the requirements for obtaining patents or registering trademarks, Berne countries cannot require any formalities as a condition for obtaining copyright protection. The Berne Convention has been amended a number of times. The following is a summary of the provisions of the Paris Act of the Berne Convention, which was amended on September 28, 1979.

---

[248] The United Nations Charter, Chapter IV, authorizes the U.N, Security Council to enforce ICJ rulings, but this is subject to veto by any of the five permanent members of the U.N. Security Council.

LITERARY AND ARTISTIC WORKS DEFINED

Article 2 of the Berne Convention states that “literary and artistic works" to include:

> "…every production in the literary, scientific and artistic domain, whatever may be the mode or form of its expression, such as books, pamphlets and other writings; lectures, addresses, sermons and other works of the same nature; dramatic or dramatico-musical works; choreographic works and entertainments in dumb show; musical compositions with or without words; cinematographic works to which are assimilated works expressed by a process analogous to cinematography; works of drawing, painting, architecture, sculpture, engraving and lithography; photographic works to which are assimilated works expressed by a process analogous to photography; works of applied art; illustrations, maps, plans, sketches and three-three-dimensional works relative to geography, topography, architecture or science."

Note that the specific items mentioned are examples and that this list is not a limitation on the types of works eligible for copyright protection.

Article 2 permits Berne countries to require that “works in general or any specified categories of works will not be protected unless they have been fixed in some material form.”

“Translations, adaptations, arrangements of music and other alterations of a literary or artistic work” are likewise “protected as original works without prejudice to the copyright in the original work.” Similarly, “collections of literary or artistic works such as encyclopedias and anthologies which, by reason of the selection and arrangement of their contents, constitute intellectual creations, are protected as such, without prejudice to the copyright in each of the works forming part of such collections.” The protection to be granted to official texts of a legislative, administrative and legal nature, and to official translations of such texts, is left to domestic legislation. The works mentioned in Article 2 must be protected in all Berne countries, for the benefit of the author and his or her successors in title.

WORKS OF APPLIED ART, INDUSTRIAL DESIGNS, AND MODELS

Berne countries are permitted to determine by domestic legislation the extent of the application of copyright laws to works of applied art and industrial designs and

models, and the conditions under which such works, designs and models are to be protected. Works that are protected in the country of origin solely as designs and models are entitled only to such special protection in another Berne country as that other country grants to designs and models. However, if that country grants no special protection for designs and models, it must protect such works as artistic works. This requirement is subject to the provisions of Berne Article 7(4), which allows Berne countries to determine by domestic legislation the term of protection for photographic works and of works of applied art in so far as they are protected as artistic works, provided that such period is at least twenty-five years from the making of such a work.

EXCLUSION FOR NEWS OF DAY

Article 2 specifies that protection under the Berne Convention does not apply to news of the day or to miscellaneous facts having the character of mere items of press information. Article 2*bis* states that countries may provide in their domestic legislation for certain limitations on the protection required, for political speeches and speeches delivered in the course of legal proceedings; the conditions under which lectures, addresses and other works of the same nature which are delivered in public may be reproduced by the press, broadcast, communicated to the public by wire and made the subject of public communication for purposes of providing information. In any event, the author must have the exclusive right to make a collection of such works.

WORKS SUBJECT TO BERNE CONVENTION

Berne Convention Article 3 specifies that the protection of the Berne Convention extends to authors who are nationals of a Berne country for their published or unpublished works and to authors who are not nationals of a Berne country "for their works first published in [a Berne country] or published simultaneously" in a Berne country and a non-Berne country. Authors who have their habitual residence in a Berne country are treated as nationals.

Article 3(3) defines the term "published works" to mean "works published with the consent of their authors" regardless of the means of manufacture of the copies, "provided that the availability of copies has been such as to satisfy the reasonable requirements of the public, having regard to the nature of the work." The following are specifically stated not to constitute publication: the "performance of a dramatic, dramatico-musical, cinematographic or musical work, the public recitation of a literary work, the communication by wire or the broadcasting of

literary or artistic works, the exhibition of a work of art and the construction of a work of architecture." Article 3(3) also provides that a works is "considered as having been published simultaneously in several countries if it has been published in two or more countries within thirty days of its first publication." Articles 7 and 7*bis* clarify how the term of protection is measured.

Article 4 makes the Berne Convention applicable to authors of cinematographic works where the maker "has his headquarters or habitual residence in a Berne country;" authors of works of architecture erected in a Berne country; and authors of "other artistic works incorporated in a building or other structure located in" a Berne country.

Article 18 applies the protection of the Berne Convention to works that, at the time the Convention comes into force in a country, "have not yet fallen into the public domain in the country of origin" because the term of protection for the work has expired. If the term has expired, causing a work to fall into the public domain, that work "shall not be protected anew." The application of these provisions is specifically made subject to "any provisions contained in special conventions" either existing or that may be concluded between Berne countries. These provisions are also explicitly made applicable to new accessions, that is, countries newly joining the Berne Convention, and to cases where protection is extended by the application of Berne Convention Article 7, which relates to the calculation of term, or by a country's abandonment of reservations.

FORMALITIES

Article 5 specifies that no formalities may be required to obtain the protection provided under the Berne Convention. Thus, unlike patent and trademark systems, applicants cannot be required to submit an application or register a work as a condition of obtaining copyright protection.

RECIPROCITY

Although Berne provides for protection based on national treatment, Article 6 permits a Berne country to "restrict the protection" it provides to works of authors from a non-Berne country that "fails to protect in an adequate manner the works of authors who are nationals of" a Berne country. However, such restrictions cannot be made to affect the rights of an author acquired before the restrictions were put in place. Countries that make restrictions must make a written declaration to the Director-General of WIPO.

MORAL RIGHTS

Article 6*bis* provides for the protection of two moral rights: "the right to claim authorship of the work and to object to any distortion, mutilation or modification of, or other derogatory action in relation to, the said work, which would be prejudicial to" the author's honor or reputation. Moral rights must be independent of the author's economic rights and belong to the author even after transfer of economic rights. This nature of moral rights is discussed more fully in the chapter on Copyright. Except as specifically provided in Article 6*bis*, the protection of moral rights is left to the domestic legislation of each Berne country.

MINIMUM TERM

Article 7 requires a term of at least the life of the author plus fifty years, in most cases. For cinematographic works, the term may "expire fifty years after the work has been made available to the public with the consent of the author," or if this does not occur within fifty years from the making of the work, the term will be fifty years from the making of the work. For anonymous or pseudonymous works where the author is not known, the term must be at least "fifty years after the work has been lawfully made available to the public," but if the author's identity is known or becomes known during that period, the term is the life of the author plus fifty years. In all cases, the term of protection is calculated from 1 January of the year following the measuring event, that is, the author's death, making the work available to the public, or making the work, as appropriate. Article 7*bis* specifies that the term of protection for works of joint authorship is to be measured from the death of the last surviving author.

RIGHTS OF AUTHORS

Article 8 provides that "[a]uthors of literary and artistic works protected by [the Berne] Convention" will "enjoy the exclusive right of making and of authorizing the translation of their works throughout the term of protection of their rights in the original works."

Article 9 provides that authors of literary and artistic works will "have the exclusive right of authorizing the reproduction of their works, in any manner or form." Exceptions may be permitted under domestic law in certain cases, "provided that such reproduction does not conflict with a normal exploitation of the work and does not unreasonably prejudice the legitimate interests of the author. Any sound or visual recording is to be considered a reproduction for purposes of" the Berne Convention.

Article 11 provides similar rights for authors of dramatic, dramatico-musical and musical works. Authors of such works have "the exclusive right to authorize the public performance of their works … by any means or process," and "any communication to the public of the performance of their works." "Authors of dramatic or dramatico-musical works" likewise have "the same rights with respect to translations" of those works.

Article 11*bis* provides that authors of literary and artistic works shall enjoy the exclusive right of authorizing "the broadcasting of their works" or their "communication to the public … by any other means of wireless diffusion of signs, sounds or images"; "any communication to the public by wire or by rebroadcasting of the broadcast of the work, when the communication is made by an organization other than the original one"; and "the public communication by loudspeaker or any other analogous instrument transmitting, by signs, sounds or images, the broadcast of the work." Such protection may be determined under domestic legislation, provided the rights are not "prejudicial to the moral rights of the author" or to the author's "right to obtain equitable remuneration" that is, in the absence of agreement, "fixed by competent authority."

Article 11*ter* provides that authors of literary works have the exclusive right to authorize "the public recitation of their works, by any means or process," "any communication to the public of the recitation of their works," and, for the "full term of their rights in the original works," the "same rights as to translation" of those works.

Article 12 provides that authors of literary or artistic works will enjoy "the exclusive right of authorizing adaptations, arrangements and other alterations of their works."

Article 14 similarly provides that authors of literary or artistic works have the exclusive right of authorizing "the cinematographic adaptation and reproduction" of their works, and "the distribution of the works thus adapted or reproduced," and "the public performance and communication to the public by wire of the works adapted or reproduced."

LIMITATIONS ON THE RIGHTS OF THE AUTHOR

Article 10 clarifies what uses of works may be made without consent of the author. These include:

- “[Q]uotations from a work which has already been lawfully made available to the public, provided that” the making of quotations “is compatible with fair practice, and their extent does not exceed that justified by the purpose, including quotations from newspaper articles and periodicals in the form of press summaries,” and
- Use, “to the extent justified by the purpose, of literary or artistic works by way of illustration in publications, broadcasts or sound or visual recordings for teaching, provided such utilization is compatible with fair practice,”

provided that “where such use is made of works,” the quotations or use must mention “the source and the name of the author if it appears thereon.”

Article 11*bis* permits countries to authorize in their domestic legislation certain other uses of works, including the preservation in official archives of “ephemeral recordings made by a broadcasting organization by means of its own facilities and used for its own broadcasts" because of the recordings’ “exceptional documentary character.”

Article 13 addresses possible limitations of the right of recording musical works and lyrics. Recordings made in accordance with Article 13 and “imported without permission from the parties concerned into a country where they are treated as infringing recordings” are “liable to seizure.”

Article 16 provides for seizure of infringing copies of a work in any Berne country “where the work enjoys legal protection,” as well as seizure of “reproductions coming from a country where the work is not protected or has ceased to be protected.”

SPECIAL ISSUES FOR CINEMATOGRAPHIC WORKS

Article 14*bis* addresses the protection of cinematographic works, including such issues as dubbing, subtitling, and broadcasting, and the authors of scenarios, dialogues and musical works created for the making of the cinematographic work.

DROIT DE SUITE

The French term *droit de suite* (“right to follow”) refers to the right of an artist or author to receive a royalty in the resale of the work. Article 14*ter* provides that the author has a right to an interest in subsequent sales of original works of art and original manuscripts of writers and composers. This right is inalienable. However, it is available “only if legislation in the country to which the author belongs so

permits, and to the extent permitted by the country where this protection is claimed."

ENFORCEMENT

Article 15 addresses the issue of what is sufficient evidence of authorship for an author to institute infringement proceedings. The "author of a literary or artistic work" is "entitled to be regarded as such," in the absence of proof to the contrary, if the author's name appears on the work in the usual manner. In such case, the author is also "entitled to bring suit for infringement." A pseudonym is sufficient to establish authorship if "the pseudonym adopted by the author leaves no doubt as to his [or her] identity." Similarly, the person or company "whose name appears on a cinematographic work in the usual manner" is, "in the absence of proof to the contrary … presumed to be the maker" of the work.

In the case of anonymous and pseudonymous works where the pseudonym does not establish the name of the author, "the publisher whose name appears on the work" is, "in the absence of proof to the contrary … deemed to represent the author, and in this capacity is entitled to protect and enforce the author's rights" until such time as "the author reveals his or her identity and establishes" the author's own "claim to authorship of the work."

Article 16 provides for the seizure of infringing copies of a work in any Berne country where the work is legally protected. It also provides for seizure of "reproductions coming from a country where the work is not protected or has ceased to be protected."

GOVERNMENT CONTROL

Article 17 provides that the provisions of the Berne Convention do not operate to affect "the right of the Government" of Berne countries "to permit, to control, or to prohibit, by legislation or regulation, the circulation, presentation, or exhibition of any work or production in regard to which the competent authority may find it necessary to exercise that right."

GREATER PROTECTION

Article 19 provides that the provisions of the Berne Convention "shall not preclude the making of a claim to the benefit of any greater protection which may be granted by legislation in a country of the Union." Thus, if a country offers greater protection than is required under Berne, the provisions of the Berne Convention are not to be interpreted as limiting or precluding the higher level of protection,

Article 20 provides for the possibility that Berne countries may enter into special agreements among themselves where such agreements grant authors more extensive rights than those granted by the Berne Convention or contain other provisions not contrary to Berne.

APPLICATION OF THE BERNE CONVENTION, RESERVATIONS AND EXCEPTIONS

Article 36 provides that a country that is party to the Berne Convention "undertakes to adopt, in accordance with its constitution, the measures necessary to ensure the application of this Convention," and that, at the time a country becomes bound by Berne, "it will be in a position under its domestic law to give effect to the provisions of" Berne.

In general, Article 30 precludes the possibility of making reservations to one or more provisions of the Berne Convention, although it preserves the rights of countries that have made reservations in regard to earlier Acts of the Convention. A limited exception allows a country to declare at the time of its accession that it will apply the provisions of an earlier Act of the Convention with regard to translation. Note that certain exceptions may be provided under the Appendix as well.

DISPUTES

Article 33 provides that "Any dispute between two or more countries of the Union concerning the interpretation or application of this Convention, not settled by negotiation, may, by any one of the countries concerned, be brought before the International Court of Justice by application in conformity with the Statute of the Court, unless the countries concerned agree on some other method of settlement." As discussed in regard to the Paris Convention, provisions regarding disputes under the Berne Convention relate to disputes between Berne countries and do not offer a mechanism that is available to private parties.

SPECIAL PROVISIONS FOR DEVELOPING COUNTRIES

The Berne Convention includes an Appendix that creates special provisions for developing countries that are members of Berne. Article 1 of the Appendix sets out the procedures for countries that wish to make use of these faculties. These procedures include the requirement to make a declaration and its effect based on the time at which it is made as well as the effect of the declaration if the country ceases to be a developing country as designated by the United Nations. Article II defines the first faculty and conditions for using it, that is, the possibility that,

instead of providing an exclusive right of translation, a country may instead offer a system of non-exclusive and non-transferable licenses, granted by the competent authority under certain conditions defined in Article II of the Appendix and subject to Article IV of the Appendix. Article III of the Appendix makes a similar provision with regard to the right of reproduction. Article IV of the Appendix further defines the requirements for exercising either the faculties of Article I or Article II. A country that wishes to use either of these sets of procedures must strictly comply with all of the procedures and safeguards in the relevant articles of the Appendix.

Other articles of the Berne Convention deal primarily with administrative matters and the procedures for joining or leaving the Convention.

AGREEMENT ON TRADE-RELATED ASPECTS OF INTELLECTUAL PROPERTY RIGHTS (TRIPS AGREEMENT)

In view of the importance of intellectual property to international trade, the past several decades have seen efforts to establish more effective and more uniform intellectual property systems. One of the most important of these was the conclusion of the Agreement on Trade-Related Aspects of Intellectual Property Rights as part of the Uruguay Round of Multilateral Trade Negotiations that established the World Trade Organization (WTO). This Agreement, referred to as the TRIPS Agreement, not only established standards for protection that must be adopted by all WTO Members, it set forth procedures that Members must have available to enforce intellectual property rights. TRIPS also contains obligations related to the administration of intellectual property systems.

An outline of the provisions of the TRIPS Agreement follows. In most areas, TRIPS standards supplement rather than replace the standards of other intellectual property conventions. Most of the substantive obligations of the Berne Convention, for example, have been incorporated by reference into the TRIPS Agreement by TRIPS Article 9 and apply to all WTO Members, even if those Members have not acceded to the Berne Convention. Similarly, most substantive obligations of the Paris Convention are incorporated by reference in the TRIPS Agreement by TRIPS Article 2.

Many of the TRIPS provisions impose an obligation to provide a higher level of protection than that required by prior international agreements on intellectual property. In a few cases, the application of TRIPS standards overlaps the standards

of intellectual property conventions, imposing dual obligations. An example of the latter situation is the requirement of national treatment.

Some agreements, such as the North American Free Trade Agreement (NAFTA) and various bilateral trade agreements, may impose higher standards than the TRIPS Agreement on their Parties. Given the national treatment and most-favored nation requirements in the TRIPS Agreement, all WTO Members may benefit from these higher standards.

Provisions of the TRIPS Agreement are summarized below.

TRIPS GENERAL PRINCIPLES

Nature of obligations

WTO Members must "give effect" to TRIPS. They must accord the treatment provided for under TRIPS to the nationals of other WTO Members. Members are permitted but not obligated to provide protection that is more extensive than that provided under the TRIPS Agreement. (Article 1)

Intellectual property conventions

Members are required to comply with certain substantive obligations of the Paris Convention. (Article 2) The TRIPS Agreement also clarifies that it does not derogate from obligations in certain provisions of existing intellectual property treaties, specifically the Paris Convention, the Berne Convention, the Rome Convention, and the Treaty on Intellectual Property in Respect of Integrated Circuits.[249]

National treatment

TRIPS Article 3 addresses a cardinal principle of the TRIPS Agreement: "Each Member shall accord treatment to the nationals of other Members treatment no less favourable than that it accords to its own nationals with regard to the protection of intellectual property" subject to certain conditions. Exceptions are permitted for "judicial and administrative procedures" such as requiring applicants to designate

[249] The TRIPS Agreement may derogate, however, from discretionary actions under the Paris Convention. Note that under Paris Article 5A, forfeiture is permitted, but there is no obligation to provide for forfeiture. TRIPS Article 27 precludes forfeiture or revocation other than for the criteria specified under TRIPS Article 27.

"an address for service" of legal process or appoint "an agent within the jurisdiction." Exceptions can be made only where they are "necessary to secure compliance with laws and regulations which are not inconsistent" with TRIPS provisions and "are not applied in a manner that would constitute a disguised restriction on trade." (Article 3)

Most-favored nation treatment

Most-favored nation treatment (TRIPS Article 4) requires that each WTO Member accord to the nationals of all Members "any advantage, favour, privilege or immunity granted to the nationals of any other country." Exceptions are made for "international agreements on judicial assistance or law enforcement of a general nature and not particularly confined to the protection of intellectual property;" advantages granted in accordance with provisions of the Berne or Rome Conventions "authorizing that the treatment be conditioned on treatment accorded in another country rather than on national treatment;" neighboring rights not provided under the TRIPS Agreement; and advantages deriving from prior international intellectual property agreements that have been notified to the Council for TRIPS and where "such measures do not constitute an arbitrary or unjustifiable discrimination against nationals of other Members." (Article 4)

Exceptions

TRIPS national treatment and most-favored nation treatment provisions do not apply to procedural requirements in certain WIPO agreements related to the acquisition or maintenance of intellectual property rights. (Article 5)

Exhaustion

The issue of exhaustion of intellectual property rights is not subject to dispute settlement under the TRIPS Agreement. (Article 6)

Principles

Members are free to adopt measures necessary to protect public health or vital sectors of the economy, and measures to prevent abuse of intellectual property rights, provided that such measures are consistent with the provisions of the TRIPS Agreement. (Article 8)

COPYRIGHT AND RELATED RIGHTS

Relation to the Berne Convention

Members must comply with Berne Convention Articles 1–21 and the Appendix. However, Berne Article 6*bis* (concerning moral rights) and rights deriving from that article are excluded from this requirement. (Article 9)

Computer programs and compilations

Members must protect computer programs as literary works under the Berne Convention. Members must also protect databases ("[c]ompilations of data or other material") as compilations under their copyright laws. This protection must be available regardless of whether the compilations are in electronic ("machine-readable") or other form. (Article 10)

Rental rights

Members must provide copyright owners ("authors and their successors in title") with the right to control the rental of copies of their copyrighted movies or computer programs, except in limited circumstances. An exception exists for cinematographic works "unless such rental has led to widespread copying of such works which is materially impairing the exclusive right of reproduction." For computer programs, the "obligation does not apply to rentals where the program itself is not the essential object of the rental." (Article 11)

Term

Berne Article 7 (made applicable to WTO Members by TRIPS Article 9) sets a minimum term of protection in various circumstances. TRIPS Article 12 provides that when "the term of protection of a work, other than a photographic work or a work of applied art, is calculated on a basis other than the life of a natural person," the minimum term must be "no less than 50 years from the end of the calendar year of authorized publication." If there is no authorized publication within 50 years from the making of the work, the minimum term must be "50 years from the end of the calendar year the work was made." (Article 12)

Exceptions and limitations to exclusive rights

WTO Members must confine any limitations or exceptions to the exclusive rights provided to copyright owners (including those specified in the Berne Convention) to "certain special cases which do not conflict with a normal exploitation of the work and do not unreasonably prejudice the legitimate interests of the right

holder." (Article 13) This provision should be understood as prohibiting limitations that would interfere with a normal exploitation of copyright.

Sound recordings

Members must provide for the right of performers to prevent the unauthorized recording of their performances or the reproduction of these recordings.[250] Phonogram producers must be given the right to authorize or prohibit reproduction of their phonograms. The rights of phonogram performers and producers must be provided for a minimum term of fifty years. Broadcasting organizations must have the right to prohibit the unauthorized fixation of their broadcasts, "the reproduction of fixations, and the rebroadcasting by wireless means of broadcasts, as well as the communication to the public of television broadcasts," and these rights must have a term of at least 20 years. (Article 14)

The rental rights provisions applicable to computer programs under Article 11 are extended to phonograms, with an additional exception for countries that had in effect on 15 April 1994 a system of equitable remuneration for rental. WTO Members are permitted to invoke exceptions and reservations to the extent permitted by the Rome Convention but must also apply the provisions of Berne Article 18 (requiring the protection of works not yet in the public domain on the date of entry into force of that Convention), *mutatis mutandis*, to the rights of performers and producers of phonograms in phonograms. (Article 14)

TRADEMARKS

Definitions

Trademarks are defined broadly as "[a]ny sign, or any combination of signs, capable of distinguishing the goods or services of one undertaking from those of other undertakings." Several types of signs that may be marks are listed. These should be understood to be examples and not an exclusive list of the types of signs that can be trademarks. WTO Members may require visual perceptibility as a condition of registration of marks. (Article 15)

---

[250]The unauthorized recording and reproduction of performances is sometimes referred to as "bootlegging," and the recordings produced in this matter as "bootleg copies."

Use

Use can be a condition of registrability but cannot be a condition for filing an application to register a mark. (Article 15)

Goods and services

"The nature of the goods and services to which a trademark is to be applied shall in no case pose an obstacle to registration of the trademark." (Article 15) For example, a WTO Member could not refuse to protect marks for alcoholic beverages even though alcoholic beverages were held in disfavor, but this would not prevent a Member from prohibiting the sale of alcoholic beverages through a separate law.

Publication

Members must publish each mark, "either before it is registered or promptly after it is registered" and must provide third parties with the opportunity to request cancellation of the registration. Members are permitted but not required to provide an opportunity for opposition to registration of a mark. (Article 15)

Rights

Members must grant the owner of a registered mark the exclusive right to prevent others from "using in the course of trade identical or similar signs for goods or services which are identical or similar" to those for which the trademark is registered, "where such use would result in a likelihood of confusion. In case of the use of an identical sign for identical goods or services, a likelihood of confusion shall be presumed." The rights of a trademark owner "must not prejudice any existing prior rights." (Article 16)

Well-known marks

The provisions of the Paris Convention related to well-known marks are confirmed and made applicable to service marks. In determining whether a mark is a well-known mark, Members must take into account "knowledge of the trademark in the relevant sector of the public, including knowledge in the Member concerned which has been obtained as a result of the promotion of the trademark." Members must also protect well-known marks where the goods and services are not similar but use of the mark "would indicate a connection" with the owner of the registered trademark and the "interests of the owner" are "likely to be damaged." (Article 16, paragraphs 2 and 3)

Exceptions

Members are permitted to "provide limited exceptions to the rights conferred by a trademark, such as fair use of descriptive terms," provided that such exceptions take into account "the legitimate interests of the owner of the trademark and of third parties." (Article 17)

Term

Members must provide a minimum term of seven years for registration of marks, and registrations must be renewable indefinitely. (Article 18)

Cancellation of registration and restrictions on use

Where use is required to maintain a registration, the registration can be cancelled only after a minimum of three years' uninterrupted non-use of the mark, unless the owner shows valid reasons for non-use based on obstacles to that use. "Circumstances arising independently of the will of the trademark owner" and that "constitute an obstacle to use of the trademark" must be recognized as valid reasons for non-use. Examples of valid reasons include import restrictions and government requirements. When the use of a mark is "subject to the control" of the mark's owner, use by others must be recognized as use of the mark for the purpose of maintaining the registration. (Article 19)

Special requirements on use of mark

Members may not unjustifiably encumber the use of a mark by "special requirements, such as use with another trademark, use in a special form or use in a manner detrimental to its capability to distinguish the goods or services of one undertaking from those of other undertakings." This requirement does not prevent a Member from requiring the use of a trademark to identify which undertaking produce the goods or provides the services "along with, but without linking it to, the trademark distinguishing the specific goods or services in question of that undertaking." (Article 20)

Licenses and assignments

Marks must be assignable "with or without the transfer of the business to which the mark belongs." Compulsory licensing of marks is prohibited. (Article 21)

GEOGRAPHICAL INDICATIONS

Definitions

Geographical indications are “indications which identify a good as originating in the territory of a Member, or a region or locality in that territory, [and] where a given quality, reputation or other characteristic of the good is essentially attributable to its geographical origin.” (Article 22)

Rights

Members must give interested parties the means to prevent any “designation or presentation of a good that indicates or suggests that the good in question originates in a geographical area other than the true place of origin” if the use of the designation or presentation would mislead "the public as to the geographical origin of the goods." (Article 22)

Members must also give interested parties the means to prevent any use that constitutes an act of unfair competition. Trademark registrations must be refused or invalidated, either *ex officio* or if requested by an interested party, if the trademark “contains or consists of a geographical indication” for goods “not originating in the territory indicated” and “use of the indication in the trademark for such goods in that Member would mislead the public as to the true place of origin.” This protection must also be available “against a geographical indication which, although literally true as to the territory, region or locality in which the goods originate, falsely represents to the public that the good originate in another territory.” (Article 22)

Scope of rights

Members must “provide the legal means for interested parties to prevent the use” of designations for wines or spirits “not originating in the place indicated, even where the true origin is indicated or the geographical indication is used in translation, or [it is] accompanied by expressions such as ‘kind,’ ‘type,’ ‘style,’ ‘imitation,’ or the like.” These requirements do not apply to customary names for goods or services or prejudice the right of a person to use his or her own name. There is no obligation for other Members to protect a geographical indication not protected in the country of origin. Members must refuse or invalidate a trademark registration for wines or spirits that “contains or consists of a geographical indication” identifying the wine or spirit that does not have the origin associated with the geographical indication. Limited exceptions are provided, in particular, where “a trademark has been applied for or registered in good faith, or where

rights to a trademark have been acquired through use in good faith," either before the date that TRIPS became applicable to the Member in question or "before the geographical indication was protected in its country of origin." (Articles 23 and 24)

INDUSTRIAL DESIGNS

Scope

Members must protect "independently created industrial designs that are new or original." Members may determine that "designs that are not new or original" if the design does not "significantly differ from known designs or combinations of known design features." Designs "dictated essentially by technical or functional considerations" may be excluded from protection. Textile designs must be protected, either through copyright or industrial design law. Requirements for industrial designs protection must "not unreasonably impair the opportunity to seek and obtain" protection for textile designs. (Article 25)

Rights

The owner has the right to prevent the making, selling, or importing [of] articles bearing or embodying a design which is a copy, or substantially a copy, of a protected design, where those acts are done for commercial purposes. Limited exceptions can be made provided they "do not unreasonably conflict with the normal exploitation" of the industrial design and "do not unreasonably prejudice the legitimate interests of the owner" of the design, "taking account of the legitimate interests of third parties." (Article 26, paragraphs 1 and 2) Exception should be understood to permit exceptions only where they do not interfere with an owner's ability to make commercial use of a design. "Legitimate interests of third parties" could include, for example, the party's interest in preventing the reproduction of designs that incorporate another party's trademark or other symbol.

Term

A minimum ten-year term must be available for industrial designs. (Article 26.3)

PATENTS

Patentability requirements and subject matter

Patents must be available in all fields of technology, for any invention, whether a product or a process, of the invention is "new, involves an inventive step, and is capable of industrial application." Only limited exceptions are permitted, such as plants and animals (other than microorganisms). If a Member elects to exempt plants from patentable subject matter, that Member must provide effective *sui generis* protection for plants. (Article 27)

Non-discrimination

Patents must be "available and patent rights enjoyable without discrimination as to the place of invention, the field of technology," or "whether products are imported or locally produced." This provision strongly suggests that a patent owner can satisfy any working requirement by importation of the goods. (Article 27)

Conditions on patent applicants

Members must require patent applicants to "disclose the invention in a manner sufficiently clear and complete for the invention to be carried out by a person skilled in the art and may require the applicant to indicate the best mode for carrying out the invention known to the inventor at the filing date or, where priority is claimed, at the priority date of the application."(Article 29) The requirement of disclosure helps to ensure that others will be able to use the invention after the term of the patent. The "best mode" requirement helps to ensure that the public receives useful knowledge in exchange for the grant of exclusive rights to the inventor. Article 29 also permits Members to require an applicant to provide information regarding the applicant's corresponding foreign applications and patent. This provision addresses a relatively common practice that allows countries to avoid the duplication of effort in search and examination.

Rights

Members must provide the patent owner with the right to exclude others from making, using, offering for sale, selling or importing for these purposes a patented product or direct product of a patented process and from using the patented process. That is, these acts cannot be undertaken without the consent of the patent owner. "Patent owners must also have the right to assign [the patent]," and to transfer it "by succession, and to conclude licensing contracts." (Article 28)

Exceptions to rights

"Members may provide limited exceptions to the exclusive rights conferred by a patent, provided that these exceptions do not unreasonably conflict with a normal exploitation of the patent and do not unreasonably prejudice the legitimate interests of the patent owner, taking account of legitimate interests of third parties." (Article 30) In general, this should be understood to mean that exceptions should not unreasonably interfere with the patent owner's ability to profit from the invention.

Compulsory licenses

Article 31 addresses certain uses of a patented invention without authorization of the right holder.[251] A government grant of permission to exercise some of the rights of the patent owner is referred to in TRIPS as *use without authorization of the right holder* but more generally as a *compulsory license*.

In addition to exceptions permitted under Article 30, Members may permit the use of an invention without the authorization of the patent owner if specified safeguards are observed. These safeguards apply both to use by the government and to use by third parties authorized by the government. Article 31 specifies the safeguards that must be met for the grant of a compulsory license in five different circumstances.

If a compulsory license is granted on the ground of nonworking, Article 31 requires that the following safeguards be observed:

- Each request for a compulsory license must be "considered on its individual merits";
- The license can be granted only after "the proposed user has made reasonable efforts" to obtain a voluntary license "on reasonable commercial terms and conditions and that such efforts have not been successful within a reasonable period of time";
- The scope and duration of each license must be "limited to the purpose for which it was authorized";
- The license must be non-exclusive;

[251] The *right holder* is the person who holds exclusive rights under a patent. This obviously includes the patent owner but could refer, for example, to an exclusive licensee under the patent.

- The use must be “non-assignable, except with that part of the enterprise or goodwill which enjoys such use”;
- The license must only be granted “predominantly for the supply of the domestic market”;
- The compulsory license must be subject to review and termination “if and when the circumstances that led to [its grant] cease to exist and are unlikely to recur,” with termination “subject to adequate protection of the legitimate interests” of the compulsory licensee;
- Adequate remuneration must be provided, “taking into account the economic value” of the compulsory license; and
- Judicial or other independent review by a higher authority must be available for the decision to grant the compulsory license and also for “any decision relating to the remuneration provided”.

Where the license is ordered to address anticompetitive practices, the required safeguards are the same as in the case of nonworking except:

- There is no requirement that the proposed user first make reasonable efforts to obtain a voluntary license on reasonable terms and conditions;
- There is no requirement that the license be granted predominantly for the supply of the domestic market;
- The need to correct anti-competitive practices may be taken into account in determining the amount of remuneration due to the patent owner; and
- Competent authorities must have “the authority to refuse termination of the compulsory license if and when the conditions which led to the license are likely to recur.”

Where use is authorized to enable exploitation of a dependent patent (i.e., a patent that cannot be exploited without infringement of another patent), the required safeguards are the same as in the case of nonworking and, in addition:

- The invention claimed in the second (dependent) patent must “involve an important technical advance of considerable economic significance in relation to the invention claimed in the first patent”;
- The owner of the first patent must be granted a cross-license to the dependent patent; and
- The compulsory license is non-assignable except with the assignment of the dependent patent.

Where use is authorized to meet a "national emergency or other circumstances of extreme urgency or in cases of public noncommercial use," the required safeguards are the same as for non-working except:

- The requirement that the proposed user first make reasonable efforts to obtain a voluntary license on reasonable terms and conditions may be waived, in which case the right holder must, "nevertheless, be notified as soon as reasonably practicable."

"In the case of public non-commercial use, where the government or contractor, without making a patent search, knows or has demonstrable grounds to know that a valid patent is or will be used by or for the government," the required safeguards are the same as in the case of nonworking except:

- "The right holder must be informed promptly" of the proposed use.

Compulsory licenses for semiconductor technology can be granted only:

- "for public non-commercial use" or
- "to remedy a practice determined after judicial or administrative process to be anti-competitive." (Article 31)

Revocation or forfeiture

An opportunity for judicial review must be available "for any decision of revocation or forfeiture of a patent." (Article 32)

Term

Members must provide a minimum 20-year term, measured from the filing date. (Article 33)

Burden of proof

In certain circumstances regarding infringement of process patents, the alleged infringer must have the burden of proof to show that its product was not made by the patented process. The legitimate interests of defendants in protecting their manufacturing and business secrets should be given due consideration. (Article 34)

INTEGRATED CIRCUIT TOPOGRAPHIES OR LAYOUT-DESIGNS

Relation to treaties

WTO Members must comply with certain articles of the Treaty on Intellectual Property in Respect of Integrated Circuits. (Article 35)

Rights

Members must make unlawful the unauthorized importation, sale, or other commercial distribution of a protected layout-design, an integrated circuit incorporating a protected layout-design, or "an article incorporating such an integrated circuit only in so far as it continues to contain an unlawfully reproduced layout-design." (Article 36) Such acts are not unlawful if done without notice as defined in Article 37;[252] for stock on hand or ordered before notice, the owner must be paid a reasonable royalty equivalent to that which would be paid under a freely negotiated license. Compulsory licenses and use by or for the government without authorization of the right holder may be applied to integrated circuit layout-designs in accordance with the provisions applicable to patents (TRIPS Article 31 (a) through (k). (Article 37)

Term

Members must provide a minimum 10-year term from filing or first commercial exploitation anywhere in the world. (Article 38)

PROTECTION OF UNDISCLOSED INFORMATION

Secret information

Members must provide means for natural and legal persons to protect "secret" information "from being disclosed to, acquired by, or used by others without their consent in a manner contrary to honest commercial practices." Information is protected provided it is "secret in the sense that it is not, as a body or in the precise configuration or assembly of its components, generally known among or readily accessible to persons within the circles that normally deal with the kind of information in question"; "has commercial value because it is secret"; and "has been subject to reasonable steps under the circumstances, by the person lawfully in control of the information, to keep it secret." (Article 39.2) Note that these requirements may be broader than some laws on trade secrets.

---

[252] Actual notice is not required. The standard is that the person performing or ordering the relevant acts did not know and had no reasonable ground to know, when acquiring the integrated circuit or article incorporating such an integrated circuit, that it incorporated an unlawfully reproduced layout-design.

Test data

Members must protect undisclosed data acquired "as a condition of market approval for pharmaceutical or agricultural chemical products" against unfair commercial use and against disclosure "except where necessary to protect the public, or unless steps are taken to ensure that the data are protected against unfair commercial use." This is generally understood to mean that Members cannot rely on test data from one party as a basis to approve the product of another party. (Article 39.3)

ANTICOMPETITIVE PRACTICES IN CONTRACTUAL LICENSES

Restrictions on licensing

Members may specify and prohibit licensing practices so long as they can be shown to have an adverse effect on competition and are consistent with the other provisions of TRIPS. (Article 40)

Consultations

Members agree to enter into consultations with any other Member and cooperate where an intellectual property owner that is a national or domiciliary of one Member undertakes anti-competitive practices that violate the laws or regulations of another Member or are subject to proceedings on that basis. (Article 40)

ENFORCEMENT OF INTELLECTUAL PROPERTY RIGHTS

General obligations

Procedures must be fair, equitable, not unnecessarily costly or complicated. Decisions must be available to parties without delay; preferably in writing and reasoned. Members must provide opportunity for judicial review of administrative decisions. (Article 41)

Civil judicial procedures for enforcement

Procedures must be timely and sufficiently detailed to provide notice to defendants "of the basis of the claims." Independent legal counsel must be allowed. Procedures must not be "overly burdensome" concerning personal appearance. All parties must be entitled to substantiate their claims through evidence. Procedures must provide protection for confidential information. (Article 42)

Civil judicial procedures on evidence

Judicial authorities must have the authority to order a party to present evidence, subject to "conditions to ensure the protection of confidential information" in appropriate cases. (Article 43) When a party "voluntarily and without good reason" refuses to provide necessary information "within a reasonable period, or significantly impedes a procedure relating to an enforcement action," WTO Members may provide that the judicial authority can make "preliminary and final determinations on the basis of the information that has been presented." (Article 43) Members may provide for the authority to order an infringer to identify third persons involved in the production and distribution of the infringing goods or services and of their channels of distribution. (Article 47)

Remedies

Injunctions against infringement, or declaratory judgments and adequate compensation, must be available. (Article 44) Adequate damages and expenses, including attorney fees, must be available and must be "adequate to compensate for the injury the right holder has suffered because of" the infringement. "Members may authorize … the award of profits or pre-established damages even where infringer did not" know or have reasonable grounds to know the action was infringing. (Article 45)

Members must give judicial authorities the authority to order the disposal of the infringing goods "outside channels of commerce in such a manner as to avoid any harm caused to the right holder, or, unless this would be contrary to existing constitutional requirements, to order the goods destroyed." Judicial authorities must also have "the authority to order that materials and implements, the predominant use of which has been in the creation of the infringing goods," be "disposed of outside the channels of commerce in such a manner as to minimize the risks of further infringement." The disposal or destruction of the goods and the disposal of materials and implements are to be without compensation to the defendant. (Article 46) Article 46 also provides that "the simple removal" of a trademark from counterfeit trademark goods is not "sufficient, other than in exceptional cases, to permit release of the goods into the channels of commerce." (Article 46)

Indemnification of the defendant

WTO Members must provide for the possibility of indemnification of the defendant for abuse of enforcement procedures, including expenses and attorney's fees. Exemption from liability may only be provided for public authorities and

officials where appropriate remedial measures where actions are taken or intended in good faith. (Article 48)

Administrative enforcement

Requirements applicable to the administrative enforcement of intellectual property rights must conform with the same standards as those applicable to judicial enforcement. (Article 49)

Provisional measures

Provisional measures must be available "to prevent an infringement of any intellectual property right from occurring," in particular, to prevent infringing articles from entering channels of commerce, and "to preserve evidence" of the alleged infringement. Judicial authorities must also be given the authority to grant provisional measures *inaudita altera parte*, that is, outside the hearing of the other party. Such an order can be granted in appropriate situations, particularly "where any delay is likely to cause irreparable harm to the right holder, or where there is a demonstrable risk of evidence being destroyed." (Article 50) This article further defines the authority that courts must have to order provisional measures, and it provides safeguards for the rights of the defendant, including the possibility of compensation for an injury caused by the use of provisional measures.

BORDER MEASURES

Suspension

WTO Members *must* provide procedures to enable a right holder with "valid grounds for suspecting that the importation of counterfeit trademark or pirated copyright goods may take place, to lodge a written application for the customs authorities to suspend the release of such goods into free circulation." (Article 51)

Application and procedures

A right holder who initiates procedures under Article 51 must: (1) "provide adequate evidence to satisfy the competent authorities that, under the laws of the country of importation, there is *prima facie* an infringement of the right holder's intellectual property right," and (2) "supply a sufficiently detailed description of the goods to make them readily recognizable by the customs authorities." (Article 52)

A *prima facie* case is established by presenting evidence that, if not rebutted, would satisfy all of the elements of infringement. This standard is less stringent

standard than in a judicial hearing, and the determination is made without hearing from the defendant, who will have an opportunity to present evidence and arguments at a hearing on the merits of the case. A series of provisions protect the defendant's rights, including notification; strict time limits; a hearing on the merits of the case; and a security that can be used to compensate the defendant.

The competent authorities must "inform the applicant within a reasonable period whether they have accepted the application and, where determined by the competent authorities, the period for which the customs authorities will take action." (Article 52) If release of the goods is suspended according to Article 51, both the importer and the applicant must be promptly notified. (Article 54)

Suspension of the release of goods is a temporary measure that must be promptly followed by a hearing on the merits of the case. Within ten working days after the applicant has been served notice of the suspension, customs authorities must be informed that "proceedings leading to a decision on the merits of the case have been initiated by a party other than the defendant," or that provisional measures have been taken to prolong the period of suspension. In appropriate cases, this time-limit may be extended by another ten working days. If proceedings leading to a decision on the merits of the case have been initiated, the defendant may request a review in order to decide, within a reasonable period, whether to modify, revoke, or confirm the measures that are in place. The review must be heard at defendant's request, and the defendant has the right to be heard. (Article 55)

If the customs authorities have not been informed within the time set in Article 55, and all other conditions for importation or exportation have been complied with, the customs authorities must release the goods. If suspension of the release of goods is carried out or continued in accordance with a provisional judicial measure, the relevant time period is determined instead by Article 50.6. (Article 55)

Article 50.6 provides that provisional measures taken to prevent infringement or preserve evidence and provisional measures taken *inaudita altera parte* to prevent irrevocable harm to the right holder, shall "be revoked or otherwise cease to have effect" upon request by the defendant "if proceedings leading to a decision on the merits of the case are not initiated within a reasonable period." This "reasonable period" is to be determined by the judicial authority ordering the measures, if the law of the WTO Member permits. In the absence of such a determination, the period must not exceed 20 working days or 31 calendar days, whichever is the longer.

The authorities must have the authority to require the applicant to provide a security or equivalent assurance. The amount of the security or assurance must be sufficient to protect the defendant and the competent authorities and to prevent abuse but must not be so large that it will unreasonably deter recourse to border measure procedures. (Article 53)

Article 56 provides that the relevant authorities must be able to "order the applicant to pay the importer, consignee, and the owner of the goods appropriate compensation for any injuring caused to them through the wrongful detention of the goods or through detention of goods released pursuant to Article 55."

During the suspension, the customs authorities must give the right holder an opportunity to have the goods inspected and may provide other information to the right holder. Permitting an inspection is without prejudice to the protection of confidential information. (Article 57)

Remedies

The competent authorities must have the authority to order the "destruction or disposal of infringing goods in accordance with the principles set out in Article 46" (see above). This right is without prejudice to other rights of action open to the right holder and is subject to the right of the defendant to seek judicial review. The authorities must "not allow the re-exportation of [counterfeit trademark goods] in an unaltered state or subject them to a different customs procedure, other than in exceptional circumstances." (Article 59)

Optional measures

In addition to the procedures outlined above, TRIPS provides for a number of optional procedures.

While it is mandatory to apply border measures to counterfeit trademark and pirated copyright goods, WTO Members *may* apply the same procedures to goods that involve other types of intellectual property infringements. WTO Members may also institute "corresponding procedures" for infringing goods destined for export from their territories. (Article 51)

Where WTO Members apply border measures to types of infringement other than counterfeit trademark and pirated copyright goods, Article 53.2 creates a procedure that may permit the release of the goods. This procedure may be applied where the goods involve industrial designs, patents, layout-designs or undisclosed information; the release has been suspended on the basis of a decision but that

decision has not been made by a judicial authority or other independent authority; and the period provided for in Article 55 “has expired without the granting of provisional relief by the duly empowered authority.” Under this procedure, if “all other conditions for importation have been complied with, the owner, importer, or consignee” of the goods is “entitled to their release upon posting a security in an amount sufficient to protect the right holder for any infringement.”

The fact that the defendant pays such a security does not prevent the right holder from pursuing any other remedy that might be available. If “the right holder fails to pursue the right of action within a reasonable period of time,” the defendant’s security must be released. (Article 53.2) Note that the provisions of this paragraph do not apply to goods where copyright or trademark infringement is alleged, nor do they apply where a court has ordered the suspension of the release of the goods.

Customs authorities must give the right holder the ability to inspect goods for which release is suspended and may provide an equivalent opportunity to the importer. In addition, where a positive determination has been made on the merits of a case (that is, the goods have been found to be infringing), Members may provide the competent authorities the authority to inform the right holder of the names and addresses of the consignor, the importer and the consignee and of the quantity of the goods in question. (Article 57)

WTO Members must provide for suspension based on an application, as provided in Article 51, but they may also provide for their authorities “to act upon their own initiative” to suspend the release of goods where “they have acquired *prima facie* evidence” of infringement. In such cases, the “authorities may at any time seek information from the right holder” to assist the authorities to exercise these powers, and “the importer and the right holder” [must] be promptly notified of the suspension. If the importer appeals against the suspension to the competent authorities, the suspension must be subject to the conditions of Article 55.

Where WTO Members provide for their authorities to act on their own initiative, they must “only exempt both public authorities and officials from liability to appropriate remedial measures where actions are taken or intended in good faith.” (Article 58) This last provision appears to indicate that no one other than public authorities and officials can be exempted from liability, and then only for actions taken or intended in good faith.

Finally, WTO Members may choose not to apply border measures to “small quantities of goods of a non-commercial nature contained in travellers' personal

luggage or sent in small consignments." Note that all three requirements must be met to invoke this exception, that is, the goods must be in small quantities, they must be non-commercial in nature, and they must be transported either in a traveler's personal luggage or sent in a small consignment.

CRIMINAL PROCEDURES

Article 61 requires WTO Members to provide for criminal procedures and penalties "at least in cases of wilful trademark counterfeiting or copyright piracy on a commercial scale." Penalties must include "imprisonment and/or monetary fines sufficient to provide a deterrent" and must be consistent with the level of penalties the Member applies for "crimes of a corresponding gravity."

The law must also provide, as appropriate, for "the seizure, forfeiture and destruction of the infringing goods and of any materials and implements the predominant use of which has been in the commission of the offence."

Criminal penalties may be applied for other types of infringement, particularly for infringements that are "committed wilfully and on a commercial scale."

ACQUISITION AND MAINTENANCE OF INTELLECTUAL PROPERTY RIGHTS AND RELATED *INTER PARTES* PROCEDURES

Procedures

Members may require compliance with reasonable procedures and formalities as a condition of acquiring or maintaining rights in trademarks, geographical designations, patents, industrial designs, or layout designs. (Article 62.1)

Speed

Where acquisition of an intellectual property right depends on grant or registration, Members must assure that procedures allow the right to be acquired "within a reasonable period" so as to avoid curtailing the term. (Article 62.2)

Service marks

Article 4 of the Paris Convention (right of priority) applies to service marks. (TRIPS Article 62.3)

Conduct of procedures

Procedures concerning acquisition or maintenance of an intellectual property right, and procedures relating to "*inter partes* procedures such as opposition, revocation,

or cancellation," must be "fair and equitable" and "not unnecessarily complicated or costly or entail unreasonable time limits or unwarranted delays." "Decisions on the merits of a case" must be "in writing and reasoned" and must be "based only on evidence" on which the parties had an opportunity to be heard. Decisions must be made available without undue delay at least to the parties to the proceedings. (Article 62.4 and Article 41, paragraphs 2 and 3)

Review

Judicial or quasi-judicial review must be available for final administrative decisions; this is not required "in cases of unsuccessful opposition or administrative revocation" if "grounds for such procedures can be the subject of invalidation procedures." (Article 62.5)

DISPUTE PREVENTION AND SETTLEMENT

Transparency

"Laws and regulations, and final judicial decisions and administrative rulings of general application" concerning "the availability, scope, acquisition, enforcement and prevention of the abuse of intellectual property rights" must be published or, if publication is not practicable, must be "made publicly available, in a national language in such a manner as to enable governments and right holders to become acquainted with them." Bilateral and multilateral agreements must also be published. (Article 63.1)

Notification

Members must notify the Council for TRIPS of laws and regulations concerning availability, scope, acquisition, enforcement and prevention of abuse of intellectual property laws. (Article 63.2)

Requests for information

Members must supply each other, on written request, with information concerning laws, regulations, and final judicial decisions and administrative rulings of general application on the availability, scope, acquisition, enforcement and prevention of abuse of intellectual property rights. No requirement exists to furnish confidential information that would impede law enforcement or be contrary to public interest or prejudice legitimate commercial interests. (Article 63, paragraphs 1, 3, and 4)

Dispute settlement

The GATT Dispute Settlement Understanding applies to the TRIPS Agreement, with a few exceptions. (Article 64)

TRANSITIONAL ARRANGEMENTS

Transition periods

TRIPS Articles 65 and 66 created a series of transitional periods for the application of TRIPS provisions. The deadline for WTO Members to apply all provisions of the TRIPS Agreement was phased in on the basis of a Member's status as a developed, developing, or least-developed country and on whether a Member was in the process of transforming from a centrally-planned economy to a market, free-enterprise economy and making structural reforms. Countries that availed themselves of the ability to defer implementation were subject to several important requirements, including a prohibition on changes during the transition period that would result in a lesser degree of consistency with the TRIPS Agreement (Article 65) and certain provisions relating to existing subject matter, described under Institutional Arrangements.

At this point, all Members except least-developed countries must comply with all TRIPS obligations. TRIPS Article 66 provided for least-developed countries to delay implementations of most provisions until 1 January 2005 and pharmaceutical product patent protection until 1 January 2010. That period has been extended several times,[253] most recently to 1 July 2021, unless before that time a Member ceases to be a least-developed country.

Incentives and technical assistance

Developed country Members must "provide incentives to enterprises and institutions in their territories to promote and encourage technology transfer" to Members that are least developed countries. (Article 66) Developed country Members must also "provide, on request and on mutually agreed terms and conditions, technical and financial cooperation in favor of developing and Members that are least developed countries." This technical and financial cooperation should include "assistance in the preparation of laws and regulations

---

[253] *See*, *e.g.*, Declaration on the TRIPS Agreement and Public Health para. 7, WT/MIN(01)/DEC/W/2 (Doha Ministerial, November 14, 2001.

on the protection and enforcement of intellectual property rights as well as on the prevention of their abuse," and "support regarding establishment or reinforcement of domestic offices and agencies" with responsibility for protecting and enforcing intellectual property rights, "including training of personnel." (Article 67)

INSTITUTIONAL ARRANGEMENTS; FINAL PROVISIONS

TRIPS Council

The Council for TRIPS monitors the operation TRIPS, including compliance with its provisions, and afford an opportunity for WTO Members to consult on "matters related to trade-related aspects of intellectual property rights." Among its other duties, the Council for TRIPS will provide assistance on dispute settlement procedures. (Article 68)

Contact point

"Members agree to cooperate with each other" to eliminate "international trade in goods infringing intellectual property rights"; in particular, they must "establish and notify contact points in their administrations and be ready to exchange information on trade in infringing goods." They must also "promote the exchange of information and cooperation between customs authorities" regarding "trade in counterfeit trademark goods and pirated copyright goods." (Article 69)

Application to existing subject matter

The protection required under of TRIPS applies to all subject matter existing at the date of application of TRIPS for the Member in question, with certain exceptions related to copyright. However, Members have no obligations with respect to acts that occurred before the date application of the Agreement and no obligation to restore subject matter in the public domain as of the date of application to the Member. (Paragraphs 1 through 6 of Article 70)

Amendment of applications for protection

Where intellectual property rights are conditioned on registration, a WTO Member must permit applications pending on the date TRIPS becomes applicable for the Member in question, "to be amended to claim any enhanced protection provided under" TRIPS. This does not include introduction of new matter. (Article 70.7) One effect of this provision is that patent applicants may add product claims to their applications that claim processes and that are pending on the date TRIPS becomes applicable to the Member in question.

Mailbox

Article 70.8 addresses the situation where a WTO Member did "not make available patent protection for pharmaceutical and agricultural chemical products commensurate with its obligations under Article 27" (dealing with patent protection) as of the date of entry into force of the WTO Agreement (1 January 1995). In that situation, the Member must provide a means by which patent applications can be filed for inventions in the excluded areas of technology. This requirement must be met by 1 January 1995.

Once a Member is obliged to offer patents for the excluded subject matter, the Member must apply the TRIPS criteria for patentability "as if those criteria were being applied on the date of filing in that Member or, if priority is available and claimed, the priority date of the application." The practical effect of this provision is that in conducting patent examination, the application would have the benefit of its actual filing date in that Member or its earlier priority date if applicable. Without this provision, most "mailbox applications" would have lost their novelty and become unpatentable while they were in the mailbox.

Finally, if the application meets the criteria for patentability, the Member must provide patent protection in accordance with TRIPS "from the grant of the patent and for the remainder of the patent term, counted from the filing date."

Exclusive marketing rights

Members that did not make available patent protection for pharmaceutical and agricultural chemical products commensurate with the obligations under the Agreement as of 1 January 1995 must grant exclusive marketing rights "for a period of five years after obtaining marketing approval in that Member or until a product patent is granted or rejected in that Member, whichever period is shorter," provided that, after 1 January 1995, "a patent application has been filed and a patent granted for that product in another Member and marketing approval obtained in such other Member." (Article 70.9)

DISPUTE SETTLEMENT AND THE TRIPS AGREEMENT

One important advantage of the TRIPS Agreement is that disputes between WTO Members can be settled under the WTO Dispute Settlement Understanding

(DSU).[254] The Agreement Establishing the World Trade Organization (WTO Agreement) adopts and strengthens dispute settlement provisions of the General Agreement on Tariffs and Trade (GATT) 1947.

The terms of TRIPS and the various other WTO Agreements are agreed by WTO Members themselves. Each WTO Member is then obligated to comply with the agreements and is entitled to expect compliance by other Members. A lack of compliance may occur either by taking an action that is incompatible with its obligations or by failing to honor a requirement.

When a Member believes that another Member has failed to comply with one or more provisions of TRIPS or another "covered agreement" under the WTO, the aggrieved Member can initiate procedures under the DSU. These procedures provide for consultations, a Dispute Settlement Body (DSB), provisions to ensure the impartiality of the proceedings, panels to hear complaints, third party input, an appeals procedure, and ultimately, either dismissal of the request or an invitation to comply within a period set by the panel. If compliance is not achieved within the period set, the Member bringing the request for consultations may request compensation.

The first step under the DSU is a request for consultations. The aggrieved Member must submit the request to the Member it believes to be out of compliance and notify the request to the DSU. This period typically lasts about two months. During consultations and throughout the dispute settlement process, proceedings are not to be considered contentious: rather, all parties are to make a good faith effort to resolve the dispute.

Under Article 3.8 of the DSU, an action that infringes obligations under a covered agreement is considered *prima facie* to constitute a case of nullification or impairment. It is therefore presumed that any failure to abide by the terms of the agreement has an adverse impact on other parties to that covered agreement, and it is the responsibility of the Member alleged to be non-compliant to rebut the charge.

---

[254] The full title of the DSU is "Understanding on rules and procedures governing the settlement of disputes."

If the Members can resolve their differences through consultations, no further procedures are required. If consultations are not successful within sixty days, a panel is appointed to hear the issues. Unlike the ICJ, jurisdiction is assured. Because agreement by the Members is the preferred method of settling disputes, consultation remains possible even after a panel is appointed and, in fact, throughout the proceedings.

Panels operate much like a court in that the parties submit documents arguing the legal basis of their positions. The panel issues a written decision on the basis of the facts presented by the Members and the panel's interpretation of the legal issues. If the panel agrees with the Member that requested consultations, the panel will give the non-compliant Member a reasonable period in which to remedy its non-compliance. If a party is dissatisfied with the result, the findings of the panel can be appealed. A decision that is upheld on appeal must be implemented.

Another important aspect of the WTO dispute settlement process is it makes provision for participation by WTO Members that are not party to the dispute but have a substantial interest in its outcome. A Member that notifies its interest to the Dispute Settlement Board and that has a substantial interest in the matter before a panel is given an opportunity to be heard by the panel and to make written submissions to the panel. These submissions are also given to the parties to the dispute and are to be reflected in the panel report. A Member that participates as a third party may also bring its own dispute on the same subject, in which case, the matter is normally to be referred to the original panel if possible.

Despite similarities to judicial proceedings, WTO dispute settlement procedures are unlike a court in one important respect: panels do not have authority to compel compliance. However, the WTO itself has the ability to encourage compliance, and to make the complaining party whole, through the availability of trade remedies, as discussed below.

TRADE REMEDIES UNDER TRIPS

Where a panel holds that a Member is not in compliance with TRIPS or another WTO agreement and the offending Member fails to remedy the non-compliance within the time allowed, the Member that requested consultations may request compensation in the form of trade remedies through a withdrawal of concessions to the offending trading partner. To determine an appropriate remedy, the WTO may assign a monetary value to losses caused by a Member's lack of compliance, and trade remedies may be authorized to enable the Member who requested

consultations to recover for its loss. This aspect of the WTO dispute settlement procedures is thought to be useful in preventing trade disputes from escalating into broader conflicts between nations.

Ordinarily, trade remedies are expected to be in the same sector as the subject of the dispute. For example, a dispute in the agriculture sector would usually result in a remedy in the agriculture sector. However, where a Member cannot realistically obtain compensation by withdrawing concessions in the same sector, the Dispute Settlement Body may approve a withdrawal of concessions in another sector, a process referred to as "cross-retaliation."

In two cases, a WTO Member has requested cross-retaliation in the form of withdrawal of protection of intellectual property. This approach raises a number of issues, such as whether the Member's failure to accord protection under TRIPS may put the Member in violation of other treaty obligations such as those arising under the Paris or Berne Conventions.[255] To date, two such instances of cross-retaliation have been approved but not implemented.[256]

INTERPRETING INTERNATIONAL AGREEMENTS

Ideally, the terms of an international agreement are carefully crafted to leave no doubt as to the meaning and intent of its terms. However, agreements are prepared by human beings, the terms of the agreements are often agreed as a result of compromise, and in any event, it is rarely possible to foresee all circumstances in which a particular issue may arise. These situations sometimes leave the exact meaning of a particular provision in doubt or at least raise the possibility that it should be construed or interpreted in a particular way. This problem is exacerbated

---

[255] This consideration and others are outlined in "Cross-Retaliation Under The WTO Dispute Settlement Mechanism Involving TRIPS Provisions," a document prepared by the ICC Commission on Intellectual Property, Document No. 450/1074 (29 June 2012), available at http://www.wto.org/english/forums_e/ngo_e/cross_retaliation_2012_e.pdf, accessed November 21 , 2013.

[256] In Dispute DS27, European Communities – Regime for the Importation, Sale and Distribution of Bananas, cross-retaliation was authorized, but the parties settled the case by agreement before intellectual property protection was withdrawn. In Dispute DS285, United States–Measures Affecting the Cross-Border Supply of Gambling and Betting Services, Antigua indicated that it wanted to continue negotiations to achieve a resolution, and its proposed implementation was still being studied at the time of this writing.

by the fact that the parties to international agreements may have legal systems that approach the interpretation of legal documents in different ways.

As a result, an agreement may contain terms that are well-understood by practitioners and judicial authorities in one system but are difficult to apply in another system. In particular, the effect of omissions may be interpreted differently, and the application of the agreement, and laws that incorporate its provisions, may or may not easily accommodate unforeseen circumstances.

VIENNA CONVENTION ON THE LAW OF TREATIES

To resolve possible doubts about the meaning of provisions in international agreements, countries have developed certain common approaches to the interpretation of international agreements. These approaches are part of a body of customary law that has been incorporated in the Vienna Convention on the Law of Treaties.[257] The Vienna Convention is an important document not only for the more than 100 countries, including Egypt, that are party to the Convention, but for other countries as well. It is important because it lays out a common understanding on the way international agreements are to be interpreted. While this does not guarantee that different countries will reach the same understanding of the terms of an international agreement, a common approach to interpretation should reduce differences and therefore opportunities for misunderstandings or disputes. In particular, WTO Agreements are interpreted in accordance with customary rules of interpretation of public international law as expressed in the Vienna Convention on the Law of Treaties, and provisions of the Convention are mentioned from time to time in connection with various disputes.[258]

The Vienna Convention addresses a number of important issues that arise in connection with the application of international agreements. Government officials, judges, lawyers, and other practitioners who are called upon to interpret the

---

[257] Do not confuse the Vienna Convention on the Law of Treaties with the Vienna Agreement Establishing an International Classification of the Figurative Elements of Marks.

[258] An exposition of the role of the Vienna Convention on the Law of Treaties in the context of the GATT and WTO can be found in a speech by then Director-General Pascal Lamy, "The Place and Role of the WTO (WTO Law) in the International Legal Order" (19 May 2006, Sorbonne, Paris), available on the WTO website at http://www.wto.org/english/news_e/sppl_e/sppl26_e.htm, accessed December 10, 2013.

provisions of international agreements will therefore find it worthwhile to study the Vienna Convention in its entirety. The topics addressed by the Vienna Convention include such matters as how and when a treaty enters into force (Articles 11–17 and 24–25); where it is applicable (Article 29); determining the authentic text of a treaty (Articles 10 and 33); reservations, that is, statements by which a nation declares that it will not be bound by certain provisions of the agreement (Articles 19–23); and the effect of a treaty on other treaties concerning the same subject matter (Article 30) and the effect of a country's domestic law on its treaty obligations (Article 27); and rules to follow in interpreting the terms of an international agreement. Some of these provisions are summarized below.

The Vienna Convention defines a "treaty" as "an international agreement concluded between States in written form and governed by international law, whether embodied in a single instrument or in two or more related instruments and whatever its particular designation." (Article 2.1(a)). Thus, in determining whether to apply the Vienna Convention to an international agreement, it does not matter whether the agreement is referred to as a treaty, agreement, convention, compact, or protocol, or by some other name.

A cardinal rule of international agreements is that "Every treaty is binding on its parties and must be observed in good faith." (Article 26) Although the phrase "good faith" is not defined in the Vienna Convention, it should be understood to refer, at a minimum, to a lack of deceit or deceptive intent. In the context of interpreting documents, observing a treaty in good faith should exclude acts that violate the terms of the treaty or that can be claimed to be consistent only on the basis of a contrived interpretation that is inconsistent with the plain meaning of a treaty provision or inconsistent with the objective and purpose of the treaty.

A related rule is that "A party may not invoke the provisions of its internal law as justification for its failure to perform a treaty." (Article 27 in part)[259] Without such a provision, each party to a treaty could obtain the benefits of the treaty from other parties but avoid its own obligations merely by citing its domestic law.

---

[259] An exception to this rule occurs where a party's consent to be bound by a treaty has been expressed in violation of a provision of its internal law regarding competence to conclude treaties and that violation was manifest and concerned a rule of its internal law of fundamental importance. *See* Vienna Convention on the Law of Treaties, Article 46.

Article 31 of the Vienna Convention provides a series of common-sense rules of interpretation:

> 1. A treaty shall be interpreted in good faith in accordance with the ordinary meaning to be given to the terms of the treaty in their context and in the light of its object and purpose.
>
> 2. The context for the purpose of the interpretation of a treaty shall comprise, in addition to the text, including its preamble and annexes:
>
> > (a) any agreement relating to the treaty which was made between all the parties in connection with the conclusion of the treaty;
> >
> > (b) any instrument which was made by one or more parties in connection with the conclusion of the treaty and accepted by the other parties as an instrument related to the treaty.
>
> 3. There shall be taken into account, together with the context:
>
> > (a) any subsequent agreement between the parties regarding the interpretation of the treaty or the application of its provisions;
> >
> > (b) any subsequent practice in the application of the treaty which establishes the agreement of the parties regarding its interpretation;
> >
> > (c) any relevant rules of international law applicable in the relations between the parties.
>
> 4. A special meaning shall be given to a term if it is established that the parties so intended.

Ordinarily, applying the principles of interpretation laid down in Article 31 should be sufficient. If, however, the meaning of a provision is still unclear or ambiguous, or if the plain meaning gives a result that is clearly absurd or unreasonable, Article 32 of the Vienna Convention provides for recourse to supplementary means of interpretation. Supplementary means of interpretation include the preparatory work of the treaty and the circumstances of its conclusion and may be used in order to

confirm the meaning resulting from the application of article 31, or to determine the meaning when the interpretation according to article 31:

(a) leaves the meaning ambiguous or obscure; or

(b) leads to a result which is manifestly absurd or unreasonable.

Following these principles should help countries interpret the provisions of international agreements in a manner consistent with best international practice.

INTERNATIONAL AGREEMENTS AND ECONOMIC DEVELOPMENT

The first chapter of this text pointed out the relationship between intellectual property and a country's economic development. In particular, the chapter referred to studies that demonstrate that a country's GDP and its ability to attract foreign investment are related to the strength of its intellectual property system. It therefore seems appropriate to end the text by describing how a country might use the system of international agreements on intellectual property to build its economy.

One important criterion is securing protection for the intellectual property of a country's own nationals. Protection at home is secured by enacting laws and regulations for the protection of intellectual property. Securing protection abroad is accomplished by joining agreements that offer protection to nationals of the countries that are members of the agreement. In particular, membership in the Paris Convention provides certain rights that permit nationals of one country to protect their inventions, marks, and industrial designs in any Paris country, subject of course to satisfying the requirements for protection in that country. Membership in the Berne Convention automatically provides protection for works of authors of any Berne country in any other Berne country.

Besides these most basic agreements, some international agreements, such as the WIPO Copyright Treaty and WIPO Performances and Phonograms Treaty, provide for higher levels of protection. To join these agreements, a country must make its laws consistent with their provisions. Recalling studies that show that protection of intellectual property is a key factor in a company's decision to invest in a particular country, taking the steps to join these agreements should make a country a more attractive site for foreign investment.

In particular, agreements like the Trademark Law Treaty, Singapore Treaty on the Law of Trademarks, and the Patent Law Treaty call on countries to simplify procedures for filing trademark and patent applications. Implementing these agreements may be important to attracting foreign direct investment because securing protection for a company's intellectual property is likely one of the first steps a company will take in deciding whether to invest abroad, and its experience with a country's industrial property office may well be its first experience with the country's business environment.

Finally, some international agreements exist solely to facilitate the process of obtaining protection abroad. These include the Patent Cooperation Treaty, the Madrid Agreement (Marks) and Madrid Protocol, the Hague Agreement Concerning the International Registration of Industrial Designs, and the Lisbon Agreement for the Protection of Appellations of Origin and their International Registration. Membership in some of these agreements can help domestic businesses expand to foreign markets and can promote foreign investment by making it easier for foreign businesses to protect their intellectual property in the country that joins these agreements.

INDEX

A

B

C

D

E

F

G

H

I

J

L

M

N

O

P

R

S

T

U